NVE CORPORATION

ILDC1x Ultraminiature Isolated DC-to-DC Convertors

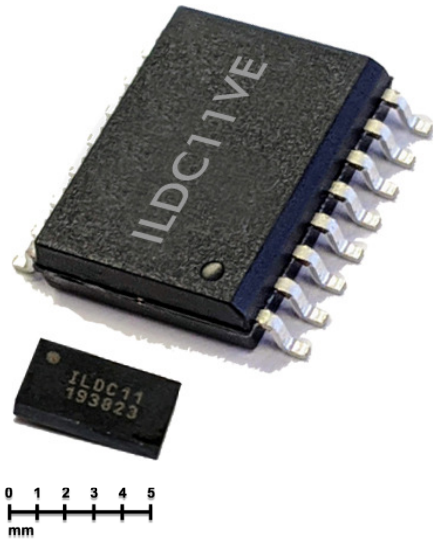

Features

- World's smallest isolated DC-DC convertor
- Ultraminiature 3 x 5.5 x 0.9 mm (0.015 cm³) DFN or 8 mm creepage SOIC16-WB
- 3.3 V input; 3.3 V, 5 V, or 6 V output options
- ¼ W output
- Fully-regulated output
- Option for external regulators
- No minimum load
- Ultralow ripple
- Low EMI without ferrite beads or inductors
- Short-circuit and thermal protection
- 4 kV_{RMS} isolation (2.5 kV_{RMS} for DFN version)
- Full –40 °C to 125 °C operating range with no derating

Applications

- Ground loop mitigation
- RS-485 / RS-422 bus power supplies
- Isolated SPI / Microwire interfaces
- Isolated ADC and DAC power supplies
- "2 x MOPP" medical systems requiring true 8 mm creepage

Block Diagram

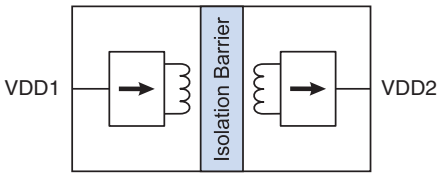

Description

The ILDC1x family is ultraminiature one-quarter watt fully-regulated 3.3 V input DC-DC convertors that generate an independent, isolated 3.3-volt, 5-volt, or 6-volt supplies.

There are two package options—the ILDC1x-15E ultraminiature 3 mm x 5.5 mm DFN6, and the ILDC1xVE SOIC16W. The DFN version is the world's smallest isolated DC-DC convertor at just 0.015 cm³.

The device minimizes board space and parts count, requiring just three external capacitors. No additional regulation is required and there is no minimum load.

The DFN version is rated at a full 2.5 kV_{RMS}, and the SOIC16 has a remarkable 4 kV_{RMS} isolation rating.

A unique ceramic/polymer composite barrier provide virtually unlimited barrier life.

Internal shielding and frequency hopping reduce EMI and eliminate the need for ferrite beads.

A high-temperature process allows up to 175 °C junction temperature for full power up to 125 °C operating temperature with no derating. Integrated short-circuit protection avoids excessive power dissipation.

NVE CORPORATION

ILDC1x Isolated DC-DC Convertors

Absolute Maximum Ratings

Parameter	Min.	Max.	Units
Supply voltage	–0.6	6	Volts
Storage temperature	–55	180	°C
Junction temperature	–55	180	°C

Recommended Operating Conditions

Parameter	Symbol	Min.	Typ.	Max.	Units	Test Conditions
Ambient operating temperature	T_{min}; T_{max}	–40		125	°C	
Junction temperature	T_J	–40		175	°C	
Input supply voltage	V_{DD1}	3	3.3	3.6	V	
Output current	I_{DD2}	0		80	mA	

Electrical Specifications

T_{min} to T_{max} and V_{DD1} = 3 V to 3.6 V unless otherwise stated						
Parameter	**Symbol**	**Min.**	**Typ.**	**Max.**	**Units**	**Test Conditions**
Output voltage ILDC11 ILDC12 ILDC13	V_{DD2}	 3 4.5 5.4	 3.3 5 6	 3.45 5.5 6.6	V	T_{min} to T_{max}; full V_{DD1} and I_{DD2} operating range
Output current ILDC11 ILDC12 ILDC13	I_{DD2}	 80 50 41			mA	
Short-circuit protection limited current	$I_{DD2\text{-}SC}$	115	125	135	mA	
Input quiescent supply current	I_{DD1Q}		200	240	mA	I_{DD2} = 0
Input supply current ILDC11 ILDC12 ILDC13	I_{DD1}		 380 312 290	 440 360 340	mA	I_{DD2} = max.
Line regulation	$\Delta V_{DD2}/\Delta V_{DD1}$		32	40	mV/V	25 °C
			16			125 °C
Load regulation	$\Delta V_{DD2}/V_{DD2}$		5	6	%	I_{DD2} = 0 to max.
Output voltage temperature coefficient	$(\Delta V_{DD2}/V_{DD2})/\Delta T$		0.017 0.03		%/°C	I_{DD2} = 10 mA I_{DD2} = 50 mA
Capacitive load	C_{DD2}			1000	µF	
Output voltage ripple	$V_{DD2RIPPLE}$		1	5	$mV_{P\text{-}P}$	20 MHz bandwidth; I_{DD2} = max.
			1			1 kHz bandwidth; I_{DD2} = max.
Start-up time	t_{SU}	2			ms	I_{DD2} = 0
				6		I_{DD2} = max.
Convertor frequency	f_{OSC}	105	113	120	MHz	

Experts on Design-In

Angst+Pfister Sensors and Power

NVE CORPORATION

Thermal Specifications

Parameter		Symbol	Min.	Typ.	Max.	Units	Test Conditions
Junction-to-ambient thermal resistance	ILDC1x-15E	θ_{JA}		46		°C/W	2s2p PCB per JESD51; leadframe pad grounded (if applicable); free air.
	ILDC1xVE			46			
Junction-to-case (top) thermal resistance	ILDC1x-15E	θ_{JC}		12			
	ILDC1xVE			9			
Junction-to-ambient thermal resistance	ILDC1x-15E	θ_{JA}		52.5			2-sided PCB with 2 oz Cu and thermal vias; leadframe pad grounded.
	ILDC1xVE			67			
Junction-to-case (top) thermal resistance	ILDC1x-15E	θ_{JC}		8			
	ILDC1xVE			12			
Package power dissipation	ILDC1x-15E	P			1.5	W	
	ILDC1xVE				1.5		

Isolation Specifications

Parameter		Symbol	Min.	Typ.	Max.	Units	Test Conditions
Isolation voltage*	ILDC1x-15E	V_{ISO}	2.5			kV_{RMS}	Per UL 1577 and VDE 0884-17
	ILDC1xVE		4				
Working voltage	ILDC1x-15E	V_{iorm}	600			V_{RMS}	Per VDE 0884-17
	ILDC1xVE		600				
Transient overvoltage	ILDC1x-15E	V_{IOTM}	4			kV_{PK}	Per VDE 0884-17
	ILDC1xVE		6				
Surge immunity	ILDC1x-15E		6.4			kV_{PK}	
	ILDC1xVE		12.8				
Creepage distance (external)	ILDC1x-15E		3.5			mm	Per IEC 60601
	ILDC1xVE		8.03	8.3			
Comparative tracking index	ILDC1x-15E	CTI	≥175			V_{RMS}	Per IEC 60112
	ILDC1xVE		≥600				
Total barrier thickness (internal)			0.012	0.016		mm	
Isolation barrier resistance		R_{IO}		$>10^{14}$		Ω	500 V_{RMS}
Isolation barrier capacitance		C_{IO}		7		pF	f = 1 MHz
Leakage current				0.2		μA_{RMS}	240 V_{RMS}, 60 Hz
Barrier life				44000		Years	100°C, 1000 V_{RMS}, 60% CL activation energy

*UL 1577 listed under Component Recognition Program File Number E207481.

ILDC1x-15E tested at 3 kV_{RMS} (4.24 V_{PK}) for 1 second, 5 pC partial discharge limit in accordance with UL 1577 and VDE 0884-17 Method B1.
Each lot sample tested at 2.5 kV_{RMS} (3.53 V_{PK}) for 1 minute.

ILDC1xVE tested at 4.8 kV_{RMS} (6.79 kV_{PK}) for 1 second, 5 pC partial discharge limit in accordance with UL 1577 and VDE 0884-17 Method B1.
Each lot sample tested at 4 kV_{RMS} (5.66 kV_{PK}) for 1 minute.

- IEC 60601-1 (medical systems)
  - ILDC1x-15E is 1 x MOOP compliant (isolation voltage ≥1.5 kV_{RMS}; creepage ≥2.5 mm).
  - ILDC1xVE is 2 x MOPP compliant (isolation voltage ≥4 kV_{RMS}; creepage ≥8 mm).

- All versions compliant with IEC 60950-1 and IEC 62368-1 end equipment standards.

Experts on Design-In
Angst+Pfister Sensors and Power

Features

Best-in-Class Isolation
A unique ceramic/polymer composite barrier provides virtually unlimited barrier life. The DFN versions provide full 2.5 kV_{RMS} isolation, and the wide-body SOIC version provides a remarkable 5 kV_{RMS} and true eight-millimeter creepage in accordance with IEC60601.

Low Parts Count
The only external components required are three inexpensive bypass capacitors on the VDD1, VDD2, and VF pads. This low external parts count reduces board area and cost.

Fully Regulated with no Minimum Load
Unlike other DC-DC convertors, ILDC1x devices have fully-regulated outputs specified over the full input voltage and output current operating ranges. This eliminates the need for an external regulator or load resistor.

Ultralow Ripple
An inexpensive external filter capacitor (VF) and excellent line regulation and ensures the output ripple voltage is less than 5 mV_{P-P}.

Short-Circuit Protection
The output current is internally limited to approximately 125 mA. This provides short-circuit protection and eliminates the need for external protection circuitry.

Inherently Low EMI
The DC-DC convertor oscillator operates above 88 MHz, a much higher frequency than conventional DC-DC convertors, where emission limits are higher since there is less risk of interference with some common commercial radio and television broadcasting.

Frequency-hopping technology dramatically reduces peak EMI, and synchronous rectification and PWM control are avoided, resulting in inherently low EMI. Ferrite beads are not required for EMI mitigation.

This inherently low EMI allows CISPR and FCC compliance without external components or shielding.

Experts on Design-In

Angst+Pfister Sensors and Power

Operation

An ILDC1x block diagram is shown below:

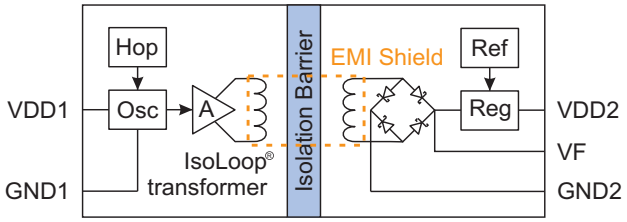

Figure 1. ILDC1x detailed block diagram.

A 113 MHz oscillator drives a high-frequency power amplifier, which in turn drives an IsoLoop® microtransformer primary. Frequency hopping reduces EMI peak amplitudes, and embedded magnetic shielding further reduces radiated EMI.

On the other side of the isolation barrier, the transformer secondary output is filtered, rectified, and regulated by a low-EMI low drop-out regulator with a precision bandgap voltage reference.

A high-temperature process allows up to 175 °C junction temperature for full power up to 125 °C operating temperature with no derating.

Experts on Design-In
Angst+Pfister Sensors and Power

Application Information

Low Parts Count
The only external components required are three inexpensive bypass capacitors: a 0.1 µF ceramic capacitor placed as close as possible to the VDD1 pad, a 10 µF ceramic capacitor for the VDD2 pad, and a 0.1 µF/16 V filter capacitor near the VF pad.

Fully Regulated with no Minimum Load
The ILDC1x has a fully-regulated output specified over the full input voltage and output current operating ranges, eliminating the need for an external regulator or load resistor.

Soft Start-up
When used in MOSFET gate drivers or H-bridges, the 2 ms minimum startup time allows the control electronics to start up before the MOSFETs can be turned on to ensure high- and low-side MOSFETs on the same side are not on at the same time.

Optional External Regulation
An external regulator can be used in place of the ILDC1x's internal low drop-out regulator for voltages up to approximately 7.5 volts. The maximum output current decreases at higher regulator output voltages, but the output power capacity remains approximately 250 milliwatts.

EMI Mitigation
Electromagnetic compatibility is regulated by international standards such as IEC 61000-4-x and CISPR 32. Although system-level performance depends on board design and layout, ILDCx parts incorporate embedded magnetic shielding to reduce radiated EMI and frequency hopping to reduce EMI peak amplitudes. This inherently low EMI generally eliminates the need for ferrite beads or other EMI mitigation.

No Temperature Derating
A double sided, double buried power plane ("2s2p") printed-circuit board optimizes thermal performance, allowing full power up to 125 °C operating temperature with no derating. Thermal vias should be used between the power plane and the board surfaces. Both input-side ground pads and the leadframe pad (for the DFN package) should be grounded using wide traces to help cool the leadframe.

At the full output current with the recommended PCB, the ILDC1x dissipates approximately one watt and the resultant junction temperature rise is 46 °C for either package, so at 125 °C ambient the junction temperature is less than the 175 °C maximum junction temperature.

A simple double-sided PCB with thermal vias can be used rather than a 2s2p PCB with some derating (see Figure 6).

Maintaining Creepage
Creepage distances are often critical in isolated circuits. Therefore, power planes should be spaced to avoid compromising creepage or clearance, and board pads should not extend past the part pads to avoid compromising clearance.

Medical Systems
Patient-applied parts electrically connected to the patient in body-floating medical systems generally require two Means Of Patient Protection (2 x MOPP). ILDC1xVE parts meet the 2 x MOPP requirements of 4 kV_{RMS} isolation and true 8 mm creepage. AC/DC power supplies meeting these requirements are difficult to find and expensive. An inexpensive 2 x MOOP power supply can supply the operator interface, while a 2 x MOPP compliant ILDC1xVE DC-to-DC converter can power the patient-applied electronics. The power requirements of the patient-applied electronics are generally low and can be satisfied with an ILDC1xVE. A typical circuit is shown in Figure 22.

Experts on Design-In

Angst+Pfister Sensors and Power

Typical Performance Graphs

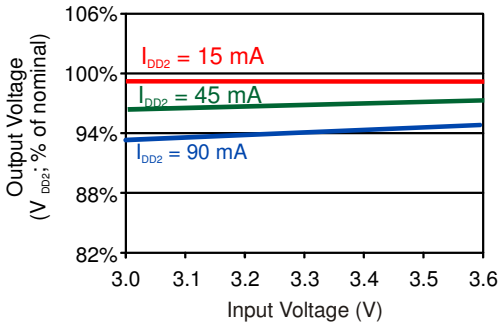

Figure 2. Typical line regulation.

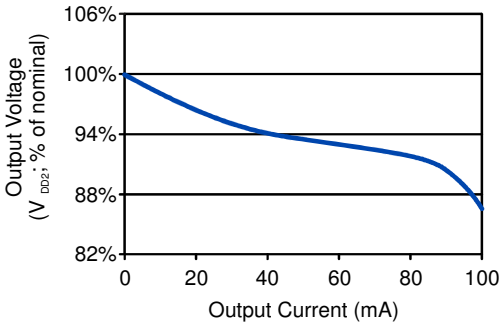

Figure 3. Typical load regulation.

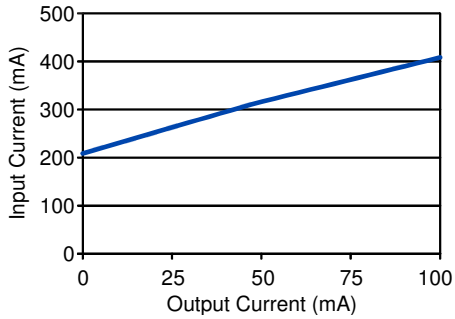

Figure 4. Typical input current versus output current.

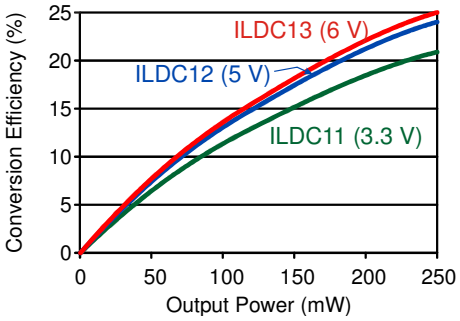

Figure 5. Conversion power efficiency.

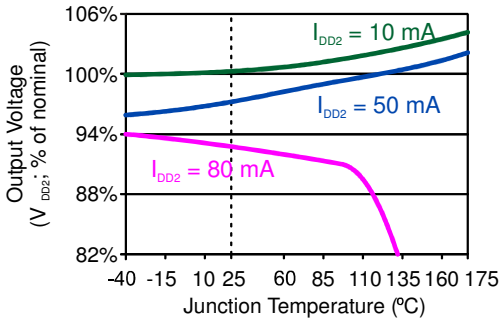

Figure 6. DC-DC convertor output vs. temperature and self-limiting current.

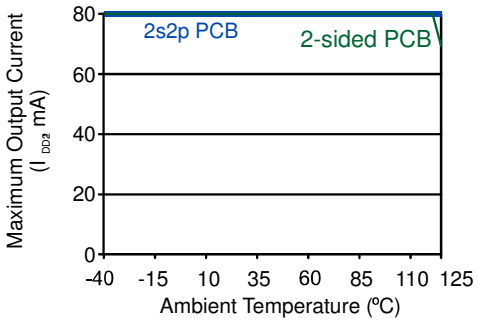

Figure 7. Temperature derating curve (ILDC11).

Experts on Design-In
Angst+Pfister Sensors and Power

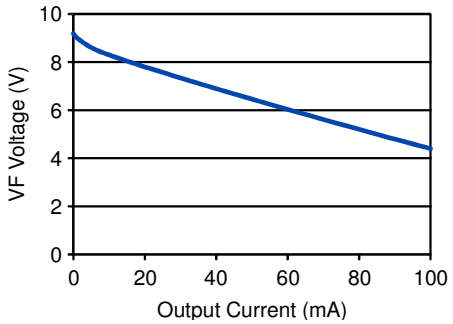

Figure 8. Typical unregulated output voltage versus output current (V_{DD1} = 3.3 V; 25 °C).

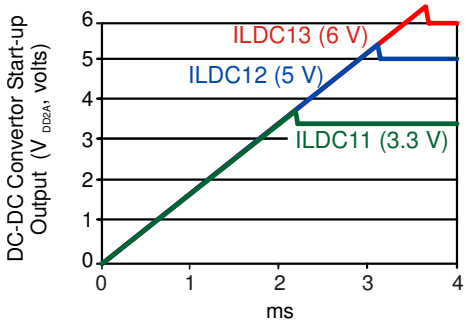

Figure 9 Typical DC-to-DC convertor start-up voltage (no load).

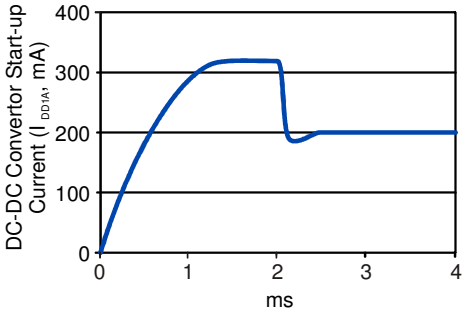

Figure 10. Typical DC-to-DC convertor start-up current (no load).

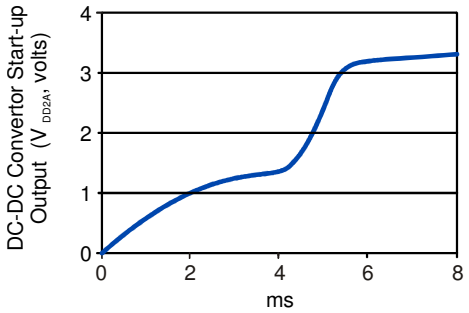

Figure 11. Typical DC-to-DC convertor start-up voltage (IL46xx; maximum load).

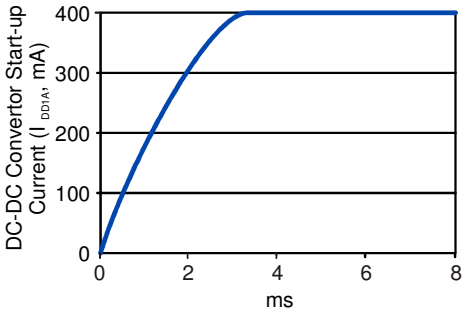

Figure 12. Typical DC-to-DC convertor start-up current (maximum load).

Typical Applications

Typical isolated RS-485 bus power supply and node:

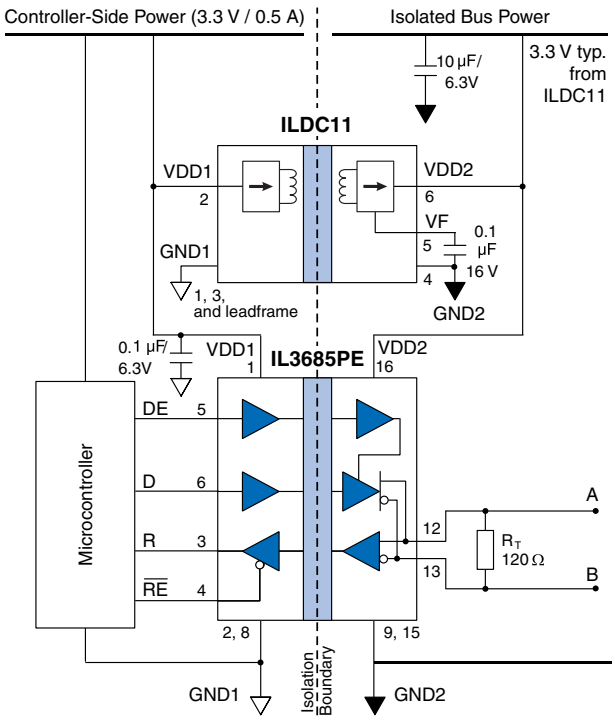

Figure 13. An isolated 3.3-volt RS-485 bus supply and node.

An isolated 3.3 volt bus supply is generated from the controller supply. The ILDC11 generates enough power for an RS-485 bus and termination resistors.

Experts on Design-In
Angst+Pfister Sensors and Power

Isolated controller supply from a 3.3-volt bus:

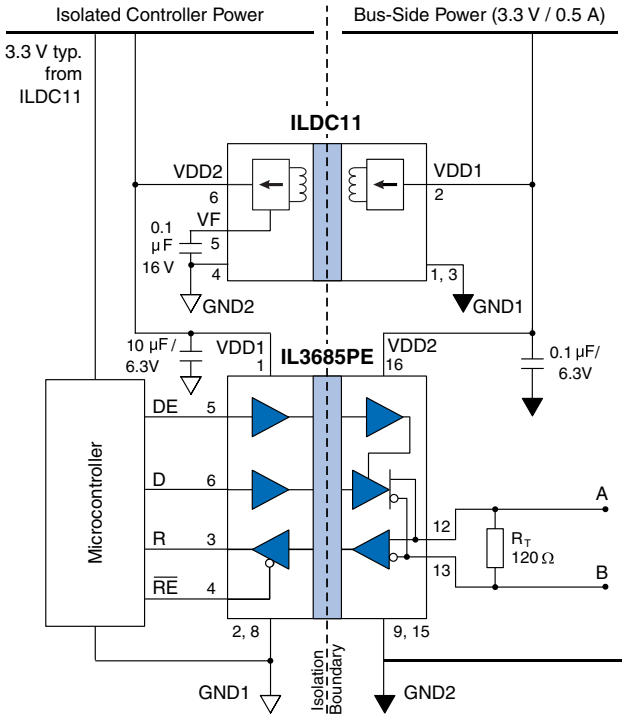

Figure 14. Reversed configuration: isolated controller supply from a 3.3-volt bus.

Normally the bus supply is generated from the controller supply, but the reverse is also possible. An advantage of this configuration is that since the DC-DC convertor does not need to supply the bus-side power, the bus can have two 120Ω termination resistors with the transceiver running at maximum speed, a combination that would exceed the ILDC11's maximum output current if it were powering the bus. The ILDC11 generates enough power to supply a microcontroller and other circuitry in addition to a transceiver.

Experts on Design-In
Angst+Pfister Sensors and Power

Isolated SPI sensor interface:

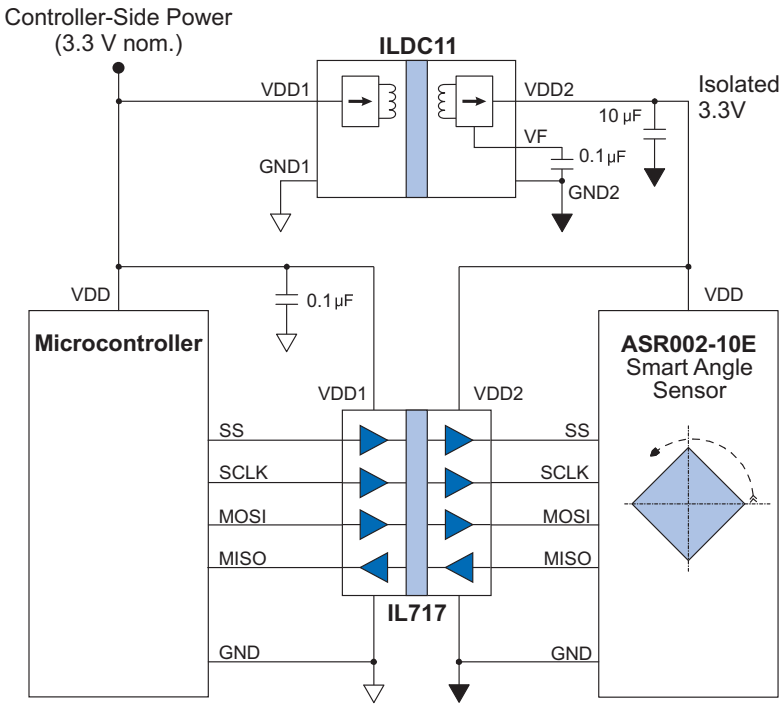

Figure 15. An isolated SPI sensor interface.

Isolation reduces noise by eliminating ground loops, and improves safety by providing another insulation level. The ILDC11 generates an isolated power supply to independently power the sensor. The four-channel IL717 isolator transmits the SPI signals while maintaining galvanic isolation. A five-channel IL261 isolator can be used to select between two sensors A similar circuit can be used for a variety of four-wire interface sensors, including angle, magnetic field, current, temperature, or pressure sensors.

Experts on Design-In
Angst+Pfister
Sensors and Power

Isolated SPI / MICROWIRE ADC interface:

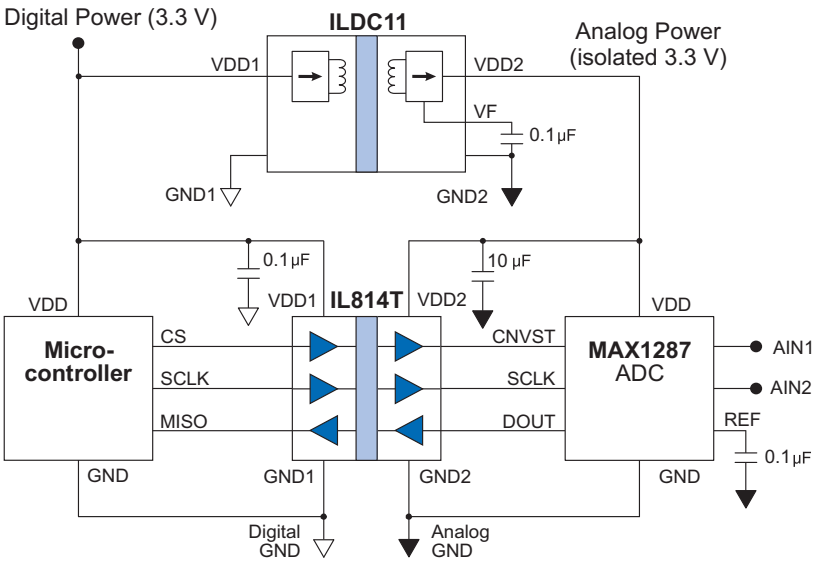

Figure 16. Isolated ADC serial interface.

An isolated analog power supply generated by the ILDC11 significantly improves the noise performance of a successive-approximation ADC. The three-channel IL814TE isolates the ADC's serial interface. A similar circuit can be used for other three-wire SPI or MICROWIRE peripherals such as DACs or sensors.

Experts on Design-In
Angst+Pfister
Sensors and Power

External regulator for nonstandard voltages:

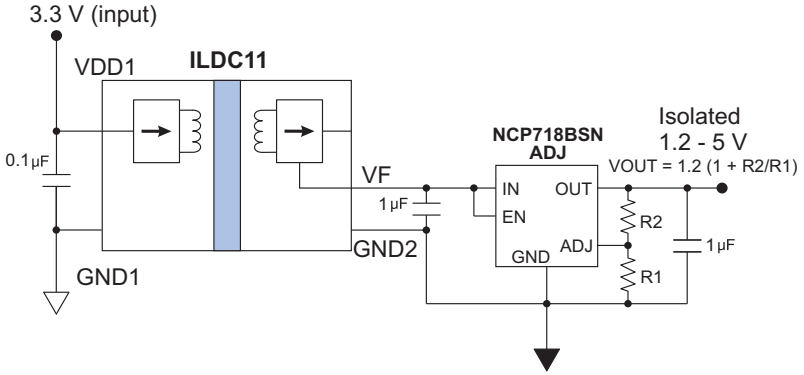

Figure 17. A 3.3-volt input / adjustable output isolated supply using an external regulator.

An inexpensive adjustable low-dropout regulator can be added to the ILDC11's VF output to provide nonstandard output voltages.

5-volt input:

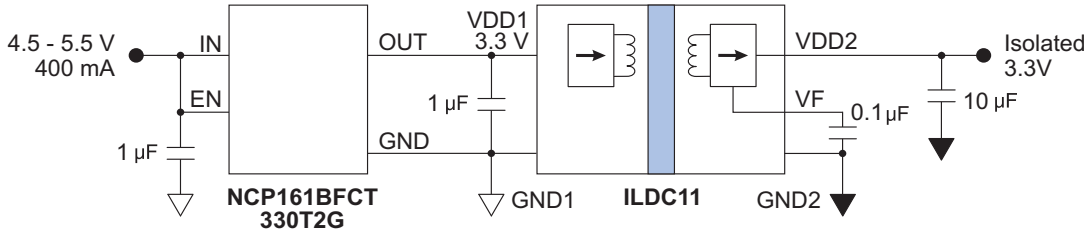

Figure 18. A 5-volt input / 3.3-volt output isolated supply.

An inexpensive chip-scale linear regulator such as an NCP161 can be used for a 5-volt input.

High-efficiency 5-volt input:

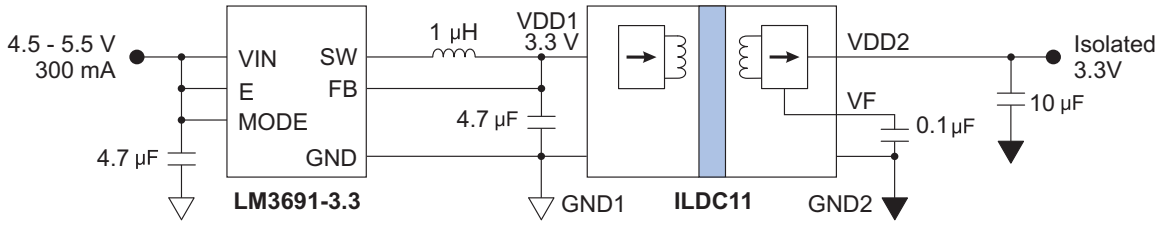

Figure 19. A 5-volt input / 3.3-volt with a buck regulator.

A step-down (buck) switching regulator can be used with a 5-volt input for higher efficiency than a linear regulator.

Experts on Design-In
Angst+Pfister
Sensors and Power

Isolated 12-volt output:

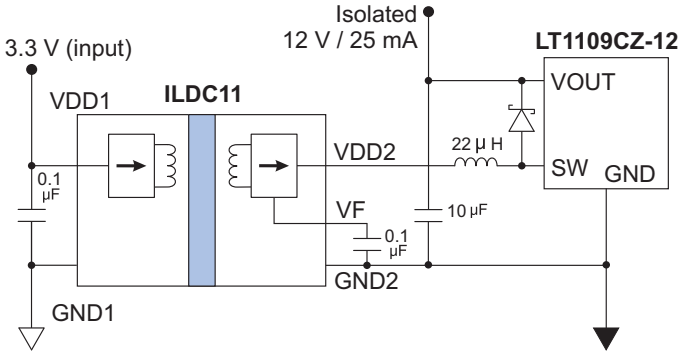

Figure 20. A 3.3-volt input / 12-volt output isolated supply.

An inexpensive boost regulator can be added to an ILDC1x to provide an isolated 12-volt output. The ILDC1x's inherent stability allows it to directly drive the inductive load required for the boost regulator.

Isolated 5-volt bus system:

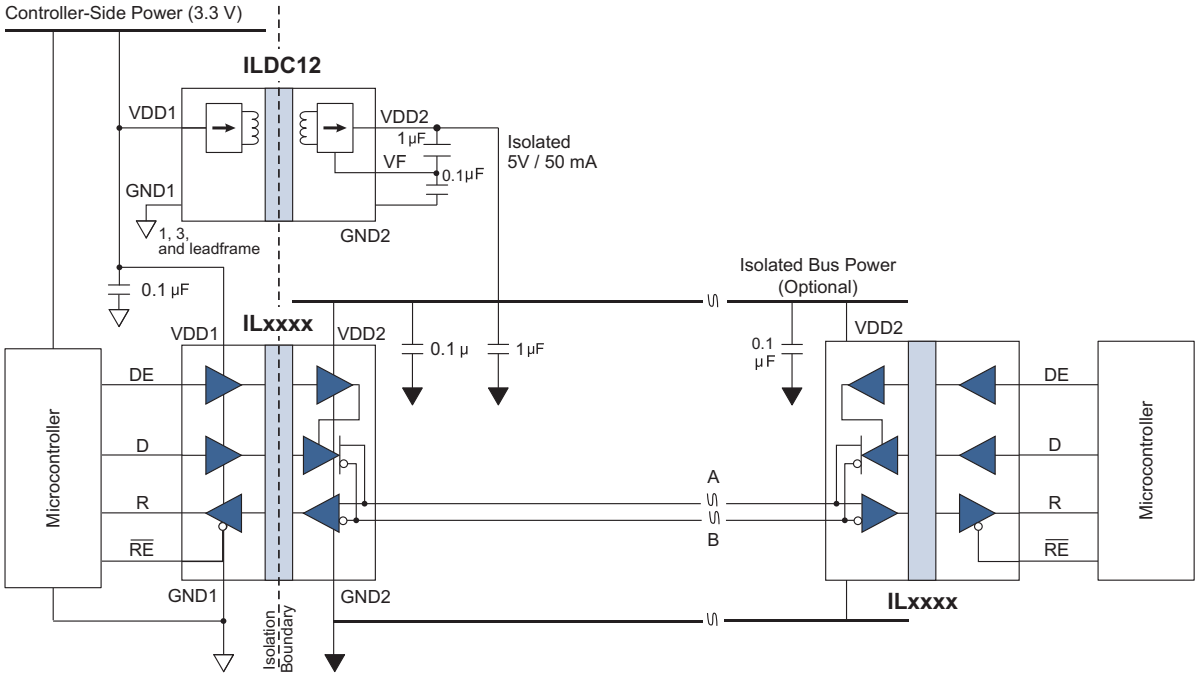

5-Volt Isolated Transceivers							
Model	**Duplex**	**Inputs**	**Mbps**	**Nodes**	**Bus ESD**	**Key Features**	**Available Packages**
IL3022	Full	Digital	4	32	7.5 kV	Low Cost	0.3" SOIC16
IL2985	Half	Digital	4	32	15 kV	Low Power	0.3" SOIC16
IL3085	Half	Digital	4	32	15 kV	Low Cost	QSOP16; 0.15" SOIC16; 0.3" SOIC16
IL3522	Full	Digital	40	50	15 kV	Very High Speed	0.3" SOIC16
IL3585	Half	Digital	40	50	15 kV	Very High Speed	0.15" SOIC16; 0.3" SOIC16
IL3685	Half	Digital	40	50	15 kV	PROFIBUS	QSOP16; 0.15" SOIC16; 0.3" SOIC16

Figure 21. An isolated 5-volt RS-485 bus system.

An ILDC12 provides isolated five volts for a traditional RS-485 bus. The ILDC12's output capacity is 50 mA, which is enough to power an RS-485 transceiver without termination resistors. It can also power a number of additional low-power nodes if desired. Low-power IL2985 transceivers have a maximum bus-side quiescent supply current of less than 2 mA. Other 5-volt isolated transceiver options include the 40 Mbps IL3585, the 40 Mbps PROFIBUS IL3685, the low-cost IL3085, and the full-duplex IL3522 or IL3022. Ultraminiature IL3685-1E or IL3085-1E QSOP16 versions are available to minimize board area.

Experts on Design-In
Angst+Pfister
Sensors and Power

Isolated H-Bridge Drivers:

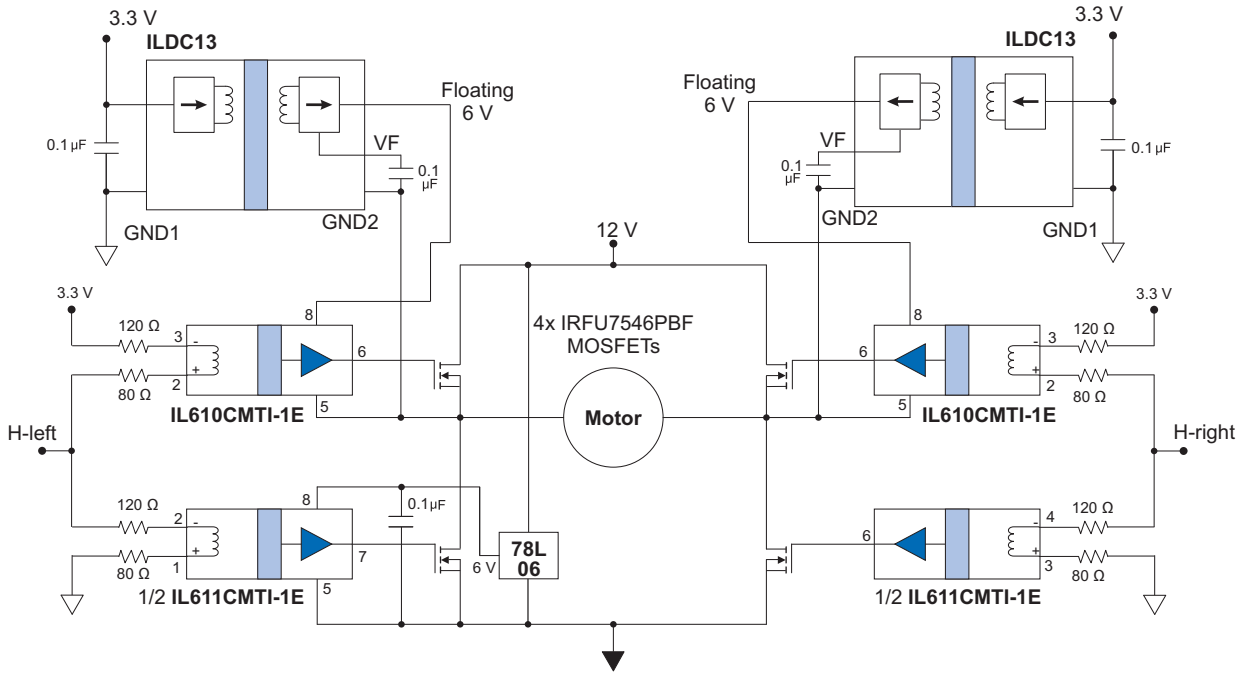

Figure 22a. Isolated H-Bridge Driver for 6 V gate drive.

The ILDC13 isolates and floats the high-side gate power, and commodity regulators provide the six volts needed to power the isolators and drive the MOSFET gates.

Four channels of isolation in three MSOP-8 isolators allow referencing the high-side gate signals to the floating MOSFET source pins, plus they level-shift low-voltage controller outputs to six volts to drive MOSFET gates. These isolators have low-impedance outputs to directly drive MOSFETs, so separate MOSFET drivers are not required. The IL600CMTI isolators are the world's smallest isolators, with the highest common-mode transient immunity in the industry. With up to 350 kV/µs guaranteed transient immunity, the IL610CMTIs prevent spurious isolator switching when the high-side MOSFETs switch.

Experts on Design-In
Angst+Pfister
Sensors and Power

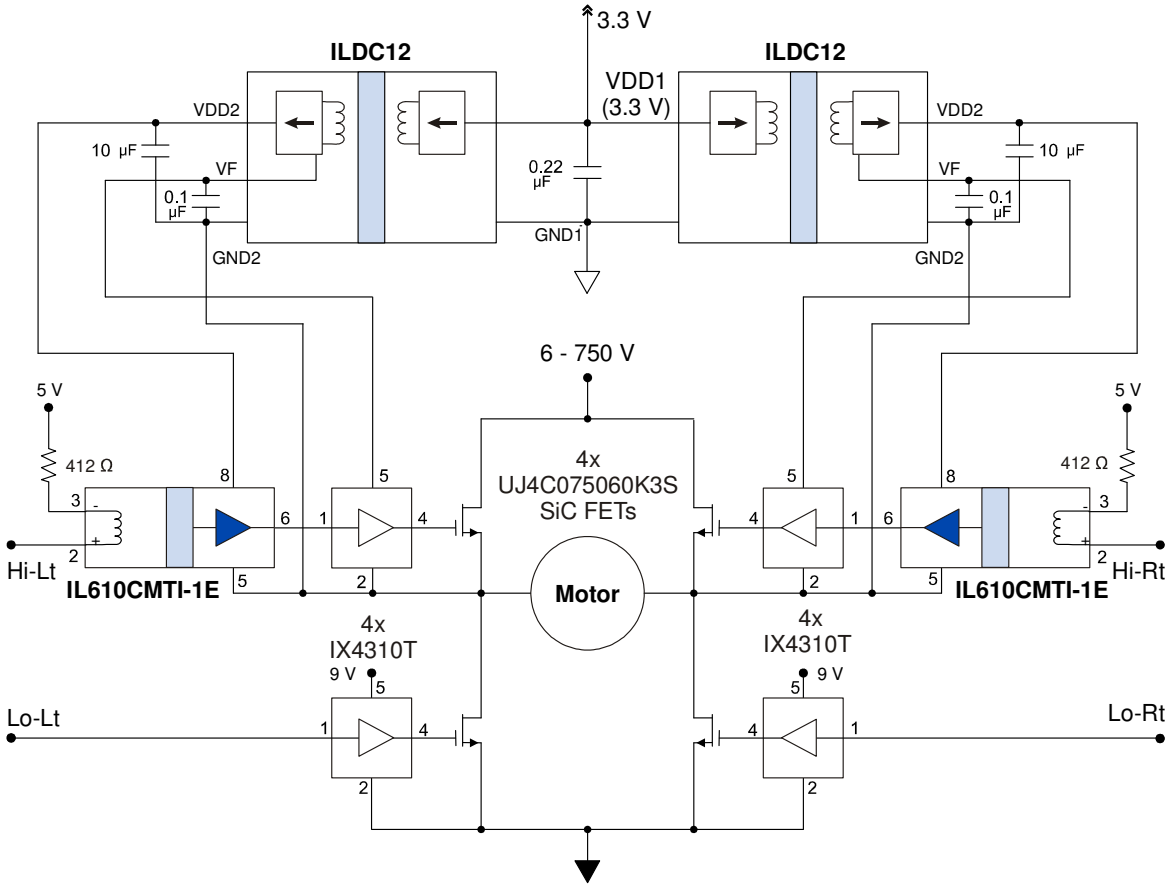

Figure 22b. Isolated H-Bridge Driver for 9 V gate drive.

An ILDC1x's unregulated VF output can be used to drive MOSFETs requiring approximately nine volts of gate drive. The VF output typically provides nine volts—enough to fully saturate most FETs. IX4310 or similar gate drivers translate the IL611CMTI isolator outputs to nine volts and provide instantaneous high gate-drive currents for fast switching speeds with large MOSFETs.

Experts on Design-In
Angst+Pfister Sensors and Power

Medical System Isolation:

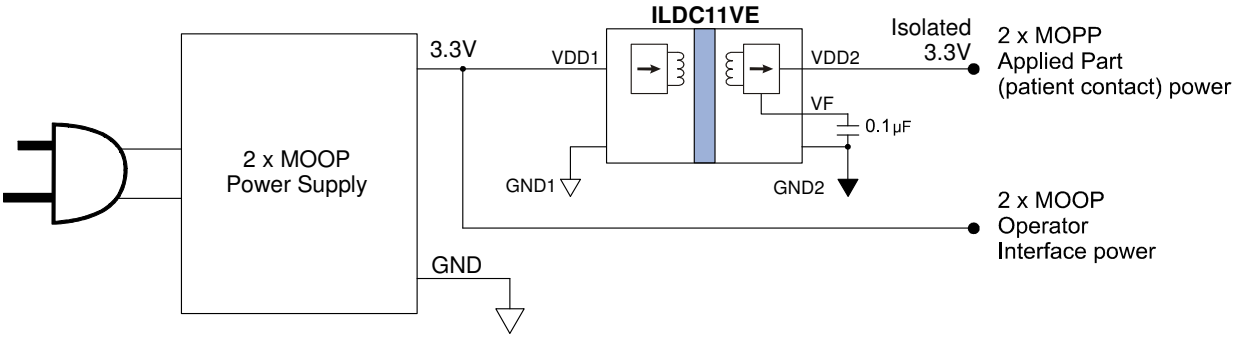

Figure 23. Medical system isolation.

Combining a double Means Of Operator Protection (2 x MOOP) power supply with a double Means of Patient Protection (2 x MOPP) ILDC1xVE provides cost-effective compliance with IEC 60601 for body-floating medical systems. The power requirements of the patient-applied electronics are generally low and can be satisfied with an ILDC1xVE.

Experts on Design-In
Angst+Pfister
Sensors and Power

NVE CORPORATION

Evaluation Boards

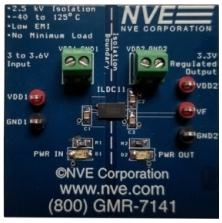

ILDC1x-15E-01 and ILDC1xVE-01 Series Evaluation Boards
These boards use a 2s2p PCB with thermal vias for optimal thermal performance. The 1.75 by 1.75 inch (45 by 45 mm) boards have an ILDC-Series part plus the three required external bypass capacitors as well as LEDs to show the DC-to-DC convertor is operating. Screw terminals provide easy connections.

Versions are available with any of the ILDC-Series parts.

Experts on Design-In
Angst+Pfister Sensors and Power

NVE CORPORATION

ILDC1x Isolated DC-DC Convertors

ILDC1x-15E (3 mm x 5.5 mm DFN6 Package)

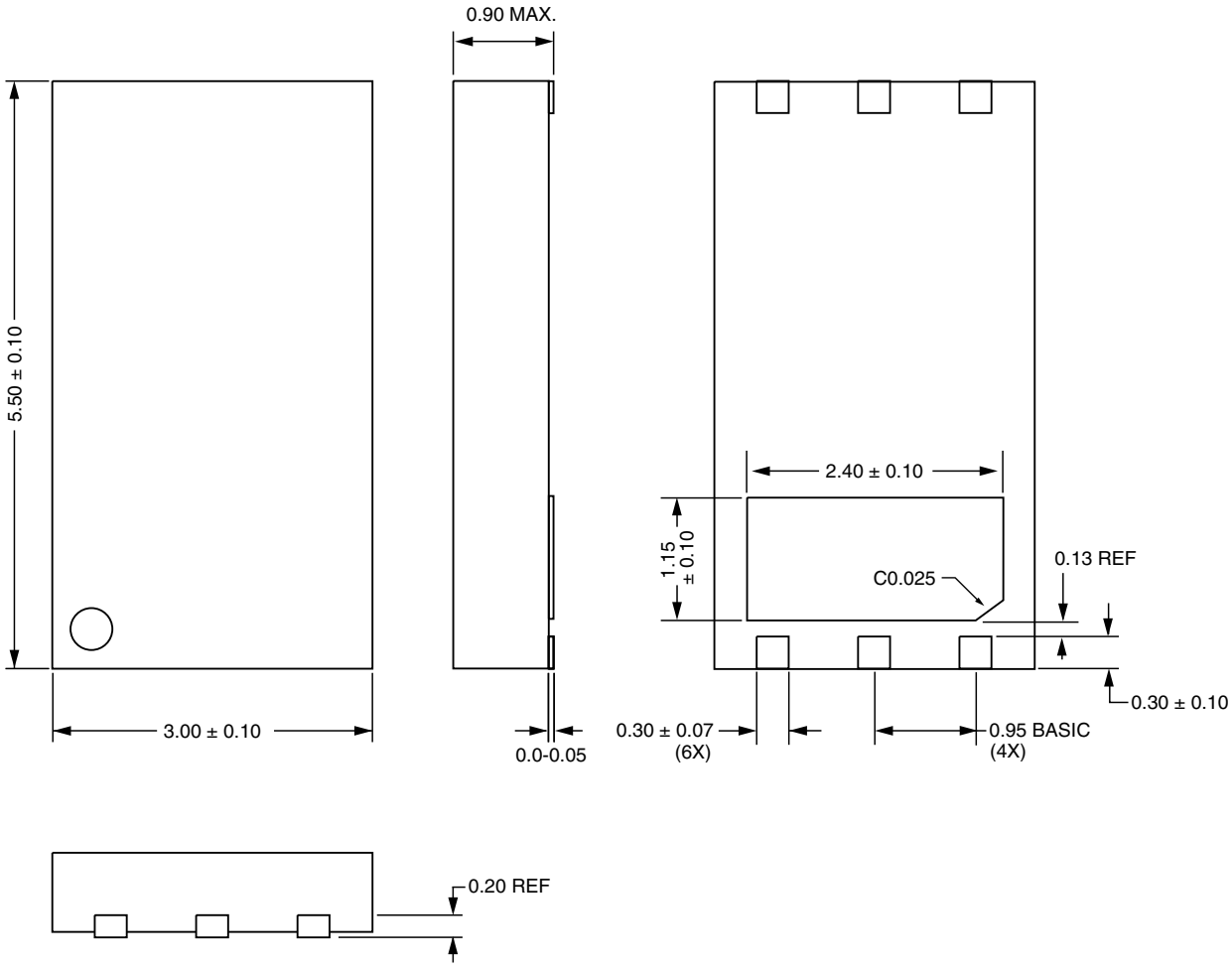

Pad	Symbol	Description
1	GND1	Input-Side Ground (internally connected to pad 3)
2	VDD1	Input Supply (bypass with a 0.1 µF capacitor)
3	GND1	Input-Side Ground (internally connected to pad 1)
4	GND2	Output-Side Ground
5	VF	Filter capacitor / external regulator (connect to a 0.1 µF / 16 V external capacitor; can be used with optional external regulator for voltages other than 3.3V)
6	VDD2	Output (bypass with a 10 µF / 6.3 V capacitor)
Leadframe pad	GND1	Input-side leadframe connection (connect to GND1 to optimize thermal performance)

Notes:

- Dimensions in millimeters.
- Soldering profile per JEDEC J-STD-020C, MSL 1.

RoHS COMPLIANT

Experts on Design-In

Angst+Pfister Sensors and Power

NVE CORPORATION

ILDC1xVE (SOIC16 Wide-Body Package)

Dimensions in inches (mm); scale = approx. 5X

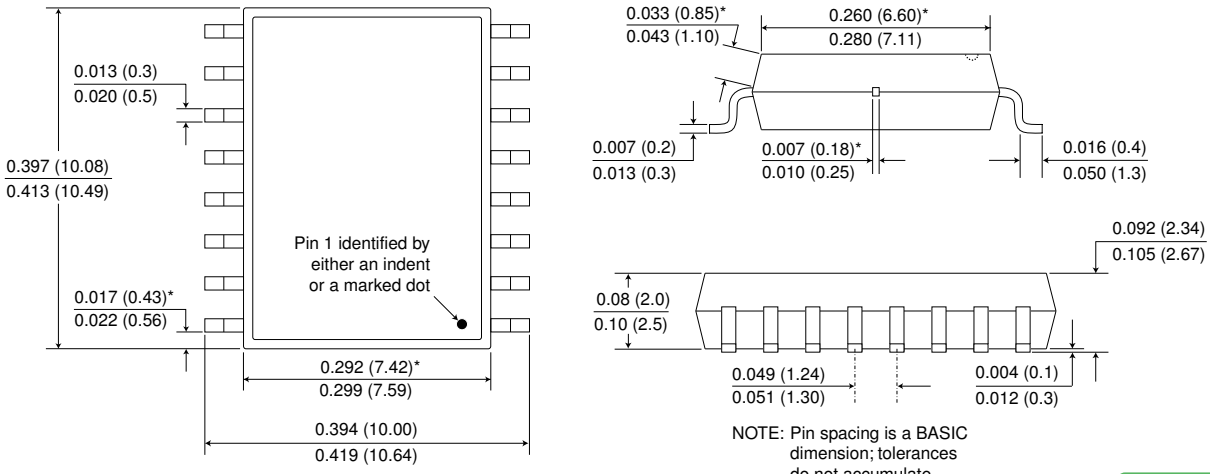

NOTE: Pin spacing is a BASIC dimension; tolerances do not accumulate

*Specified for True 8™ package to guarantee 8 mm creepage per IEC 60601.

Soldering profile per JEDEC J-STD-020C, MSL 1.

RoHS COMPLIANT

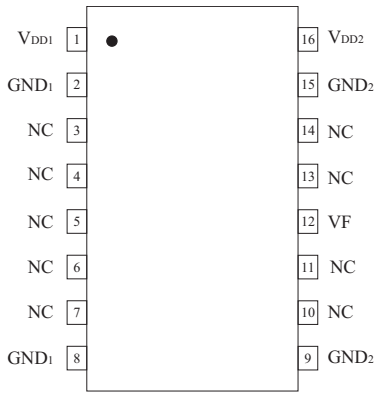

Pin	Symbol	Description
1	VDD1	Input Supply (bypass with a 0.1 µF capacitor)
2	GND1	Input-Side Ground (internally connected to pin 8)
8	GND1	Input-Side Ground (internally connected to pin 2)
9	GND2	Output-Side Ground (internally connected to pin 15)
12	VF	Filter capacitor / external regulator (connect to a 0.1 µF / 16 V external capacitor; can be used with optional external regulator for voltages other than 3.3V)
16	VDD2	Output (bypass with a 10 µF / 6.3 V capacitor)
3, 4, 5, 6, 7, 10, 11, 13, 14	NC	No internal connection

Experts on Design-In
Angst+Pfister Sensors and Power

ILDC1x-15E Recommended Layout Footprint

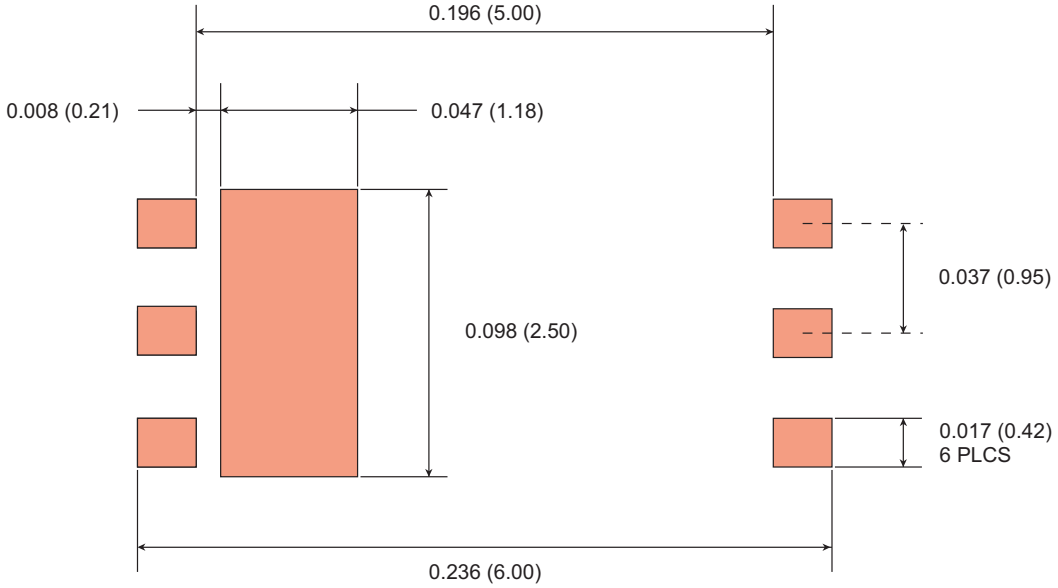

ILDC1xVE Recommended Layout Footprint

Dimensions in inches (mm); scale = approx. 5X

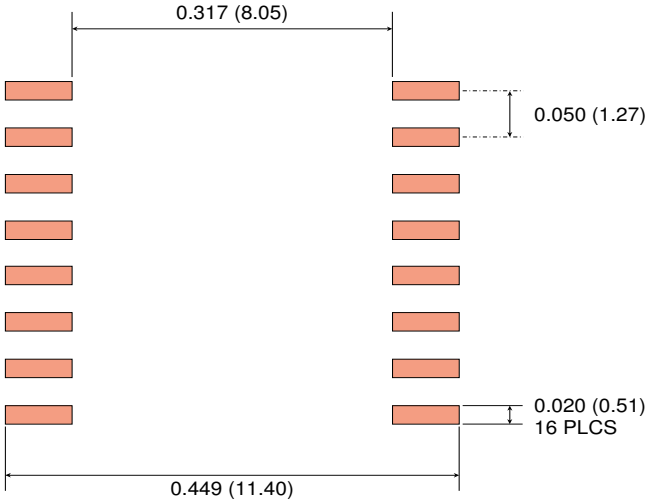

Dimensions in inches (millimeters)

Experts on Design-In

Angst+Pfister
Sensors and Power

NVE CORPORATION

Ordering Information

ILDC1x-15E TR7

Product Line
IL = Isolation products

Product Family
DC = DC-DC convertor

Part Numbers
11 = 3.3 V in / 3.3 V out
12 = 3.3 V in / 5 V out
13 = 3.3 V in / 6 V out

Part Package

15 = 3 x 5.5 mm DFN package
V = SOIC16 high-voltage wide-body package

RoHS-compliance
E = RoHS-compliant

Bulk Packaging
Blank = Bulk (tubes)
TR7 = 7" Tape and Reel
TR13 = 13" Tape and Reel

Part Number	Package	Input Voltage	Output Voltage
ILDC11VE	SOIC16W	3.3 V	3.3 V
ILDC11-15E	DFN6		
ILDC12VE	SOIC16W	3.3 V	5 V
ILDC12-15E	DFN6		
ILDC13VE	SOIC16W	3.3 V	6 V
ILDC13-15E	DFN6		

Available Parts.

Experts on Design-In
Angst+Pfister Sensors and Power

Revision History

ISB-DS-001-ILDC1x-RevG Sept. 2022	**Changes** • Reduced startup current (p. 2). • Received UL approval (p. 3). • Changed isolation voltage from 5 kV to 4 kV under the more stringent IEC60747-17 standard. • Added IEC 60601 medical equipment standards (p. 3). • Added equipment-level safety standards such as IEC 62368-1 (p. 3). • Added section on EMI mitigation (p. 6). • Added section on medical systems (p. 6). • Changed start-up description with soft-start on lot numbers 22xxxx and higher. • Changed Fig. 9 for soft-start. • Added diagram for medical system isolation (Fig. 22).
ISB-DS-001-ILDC1x-RevF April 2021	**Changes** • Added 5 V and 6 V output options (ILDC12 and ILDC13). • Added a wide-body SOIC16 version with 5 kV_{RMS} isolation (ILDC1xVE). • Updated isolation specifications (p. 3). • Discontinued the 5 V bus demo board with an external regulator since we now offer a 5 V output DC-DC convertor version.
ISB-DS-001-ILDC11-RevE Oct. 2020	**Changes** • Added VF vs. output current typical performance graph (Figure 8). • Added descriptions of external regulator options. • Revised external regulator reference designs and isolated H-bridge driver.
ISB-DS-001-ILDC11-RevD Sept. 2020	**Change** • More detailed Figure 18 (isolated H-bridge driver).
ISB-DS-001-ILDC11-RevC July 2020	**Changes** • Added start-up current specification (p. 2) and typical graph (Figure 10). • Added thermal protection description (p. 2) and typical graph (Figure 10). • Updated step-down regulator reference design with higher-current regulator (Figure 16).
ISB-DS-001-ILDC11-RevB June 2020	**Change** • Added efficiency performance graph (Figure 5).
ISB-DS-001-ILDC11-RevA June 2020	**Changes** • Finalized performance graphs. • Changed package description from QFN to DFN. • Additional application circuits. • Initial release.
ISB-DS-001-ILDC11-PRELIM3 February 2020	**Changes** • Updated and expanded thermal resistance specifications. • Added a derating curve for a double-sided PCB. • Added application circuits. • Added Evaluation Boards.

Experts on Design-In

Angst+Pfister Sensors and Power

Datasheet Limitations
The information and data provided in datasheets shall define the specification of the product as agreed between NVE and its customer, unless NVE and customer have explicitly agreed otherwise in writing. All specifications are based on NVE test protocols. In no event however, shall an agreement be valid in which the NVE product is deemed to offer functions and qualities beyond those described in the datasheet.

Limited Warranty and Liability
Information in this document is believed to be accurate and reliable. However, NVE does not give any representations or warranties, expressed or implied, as to the accuracy or completeness of such information and shall have no liability for the consequences of use of such information.

In no event shall NVE be liable for any indirect, incidental, punitive, special or consequential damages (including, without limitation, lost profits, lost savings, business interruption, costs related to the removal or replacement of any products or rework charges) whether or not such damages are based on tort (including negligence), warranty, breach of contract or any other legal theory.

Right to Make Changes
NVE reserves the right to make changes to information published in this document including, without limitation, specifications and product descriptions at any time and without notice. This document supersedes and replaces all information supplied prior to its publication.

Use in Life-Critical or Safety-Critical Applications
Unless NVE and a customer explicitly agree otherwise in writing, NVE products are not designed, authorized or warranted to be suitable for use in life support, life-critical or safety-critical devices or equipment. NVE accepts no liability for inclusion or use of NVE products in such applications and such inclusion or use is at the customer's own risk. Should the customer use NVE products for such application whether authorized by NVE or not, the customer shall indemnify and hold NVE harmless against all claims and damages.

Applications
Applications described in this datasheet are illustrative only. NVE makes no representation or warranty that such applications will be suitable for the specified use without further testing or modification.

Customers are responsible for the design and operation of their applications and products using NVE products, and NVE accepts no liability for any assistance with applications or customer product design. It is customer's sole responsibility to determine whether the NVE product is suitable and fit for the customer's applications and products planned, as well as for the planned application and use of customer's third party customers. Customers should provide appropriate design and operating safeguards to minimize the risks associated with their applications and products.

NVE does not accept any liability related to any default, damage, costs or problem which is based on any weakness or default in the customer's applications or products, or the application or use by customer's third party customers. The customer is responsible for all necessary testing for the customer's applications and products using NVE products in order to avoid a default of the applications and the products or of the application or use by customer's third party customers. NVE accepts no liability in this respect.

Limiting Values
Stress above one or more limiting values (as defined in the Absolute Maximum Ratings System of IEC 60134) will cause permanent damage to the device. Limiting values are stress ratings only and operation of the device at these or any other conditions above those given in the recommended operating conditions of the datasheet is not warranted. Constant or repeated exposure to limiting values will permanently and irreversibly affect the quality and reliability of the device.

Terms and Conditions of Sale
In case an individual agreement is concluded only the terms and conditions of the respective agreement shall apply. NVE hereby expressly objects to applying the customer's general terms and conditions with regard to the purchase of NVE products by customer.

No Offer to Sell or License
Nothing in this document may be interpreted or construed as an offer to sell products that is open for acceptance or the grant, conveyance or implication of any license under any copyrights, patents or other industrial or intellectual property rights.

Export Control
This document as well as the items described herein may be subject to export control regulations. Export might require a prior authorization from national authorities.

Automotive Qualified Products
Unless the datasheet expressly states that a specific NVE product is automotive qualified, the product is not suitable for automotive use. It is neither qualified nor tested in accordance with automotive testing or application requirements. NVE accepts no liability for inclusion or use of non-automotive qualified products in automotive equipment or applications.

In the event that customer uses the product for design-in and use in automotive applications to automotive specifications and standards, customer (a) shall use the product without NVE's warranty of the product for such automotive applications, use and specifications, and (b) whenever customer uses the product for automotive applications beyond NVE's specifications such use shall be solely at customer's own risk, and (c) customer fully indemnifies NVE for any liability, damages or failed product claims resulting from customer design and use of the product for automotive applications beyond NVE's standard warranty and NVE's product specifications.

©NVE Corporation
All rights are reserved. Reproduction in whole or in part is prohibited without the prior written consent of the copyright owner.

Experts on Design-In
Angst+Pfister Sensors and Power

Angst+Pfister
Sensors and Power

We are here for you. Addresses and Contacts.

Headquarter Switzerland:

Angst+Pfister Sensors and Power AG
Thurgauerstrasse 66
CH-8050 Zurich
Phone +41 44 877 35 00
sensorsandpower@angst-pfister.com

Office Germany:

Angst+Pfister Sensors and Power Deutschland GmbH
Edisonstraße 16
D-85716 Unterschleißheim
Phone +49 89 374 288 87 00
sensorsandpower.de@angst-pfister.com

Scan here and get an overview of personal contacts!

sensorsandpower.angst-pfister.com