480W Three Phase Industrial DIN RAIL with PFC Function TDR-480 series

User's Manual

AS/NZS62368-1 UL508 UL62368-1 BIS IS13252(Part1) (only for 24V) IEC62368-1 TPTC004

Features

- Three-Phase 340 ~ 550VAC wide range input (Dual phase operation possible)
- Width only 85.5mm
- Built-in active PFC function compliance to BS EN/EN61000-3-2
- High efficiency 93% and low power dissipation
- Protections: Short circuit / Overload / Over voltage / Over temperature
- Cooling by free air convection
- Built-in constant current limiting circuit
- Can be installed on DIN rail TS-35/7.5 or 15
- UL508(industrial control equipment)approved
- BS EN/EN61000-6-2(BS EN/EN50082-2) industrial immunity level
- Optional DC OK relay contact
- 3 years warranty

Applications

- Industrial control system
- Semiconductor fabrication equipment
- Factory automation
- Electro-mechanical apparatus

GTIN CODE

MW Search: https://www.meanwell.com/serviceGTIN.aspx

Description

TDR-480 is one economical slim 480W DIN rail power supply series, adapt to be installed on TS-35/7.5 or TS-35/15 mounting rails. The body is designed 85.5mm in width, which allows space saving inside the cabinets. The entire series adopts the full range AC input from 3ψ 340VAC to 550VAC (Dual Phase operation possible) and conforms to BS EN/EN61000-3-2, the norm the European Union regulates for harmonic current. TDR-480 is designed with metal housing that enhances the unit's power dissipation. With working efficiency up to 93 %, the entire series can operate at the ambient temperature between -20℃ and 70℃ under air convection. It is equipped with constant current mode for overload protection, fitting various inductive or capacitive applications. The complete protection functions and relevant certificates for industrial control apparatus (UL508, IEC 62368-1 CB approved by UL.) make TDR-480 a very competitive power supply solution for industrial applications.

Model Encoding

TDR - 480 - 24

- 24 → Output voltage
- 480 → Output wattage
- TDR → Series name

File Name:TDR-480-SPEC 2022-12-02

MEAN WELL

480W Three Phase Industrial DIN RAIL with PFC Function **TDR-480 series**

SPECIFICATION

MODEL		TDR-480-24	TDR-480-48
OUTPUT	DC VOLTAGE	24V	48V
	RATED CURRENT	20A	10A
	CURRENT RANGE	0 ~ 20A	0 ~ 10A
	RATED POWER	480W	480W
	RIPPLE & NOISE (max.) Note.2	150mVp-p	150mVp-p
	VOLTAGE ADJ. RANGE	24 ~ 28V	48 ~ 55V
	VOLTAGE TOLERANCE Note.3	±1.0%	±1.0%
	LINE REGULATION	±0.5%	±0.5%
	LOAD REGULATION	±1.0%	±1.0%
	SETUP, RISE TIME	1200ms, 60ms/400VAC 800ms, 60ms/500VAC at full load	
	HOLD UP TIME (Typ.)	20ms / 400VAC 20ms / 500VAC at full load	
INPUT	VOLTAGE RANGE Note.4	Three-Phase 340 ~ 550VAC (Dual phase operation possible) 480 ~ 780VDC	
	FREQUENCY RANGE	47 ~ 63Hz	
	POWER FACTOR (Typ.)	PF≧0.9/400VAC PF≧0.88/500VAC at full load	
	EFFICIENCY (Typ.)	92.5%	93%
	AC CURRENT (Typ.)	0.85A/400VAC 0.7A/500VAC	
	INRUSH CURRENT (Typ.)	COLD START 50A	
	LEAKAGE CURRENT	<3.5mA / 530VAC	
PROTECTION	OVERLOAD	105 ~ 130% rated output power	
		Protection type : Constant current limiting, unit will shut down after 3 sec. ,re-power on to recover	
	OVER VOLTAGE	29 ~ 33V	56 ~ 65V
		Protection type : Shut down o/p voltage, re-power on to recover	
	OVER TEMPERATURE	Shut down o/p voltage, recovers automatically after temperature goes down	
ENVIRONMENT	WORKING TEMP. Note.5	-30 ~ +70℃ (Refer to "Derating Curve")	
	WORKING HUMIDITY	20 ~ 95% RH non-condensing	
	STORAGE TEMP., HUMIDITY	-40 ~ +85℃, 10 ~ 95% RH	
	TEMP. COEFFICIENT	±0.03%/℃ (0 ~ 50℃)	
	VIBRATION	Component:10 ~ 500Hz, 2G 10min./1cycle, 60min. each along X, Y, Z axes; Mounting: Compliance to IEC60068-2-6	
SAFETY & EMC (Note 4)	SAFETY STANDARDS	UL508, IEC62368-1,UL 62368-1, AS/NZS 62368.1, BIS IS13252(Part1)(only for 24V),EAC TP TC 004 approved, Design refer to BS EN/EN62368-1	
	WITHSTAND VOLTAGE	I/P-O/P:3KVAC I/P-FG:2KVAC O/P-FG:0.5KVAC O/P-DC OK(optional):0.5KVAC	
	ISOLATION RESISTANCE	I/P-O/P, I/P-FG, O/P-FG:>100M Ohms / 500VDC / 25℃/ 70% RH	

EMC EMISSION	Parameter	Standard	Test Level / Note
	Conducted	BS EN/EN55032(CISPR32) / BS EN/EN61204-3	Class B
	Radiated	BS EN/EN55032(CISPR32) / BS EN/EN61204-3	Class B
	Harmonic Current	BS EN/EN61000-3-2	Class A
	Voltage Flicker	BS EN/EN61000-3-3	-----

EMC IMMUNITY	BS EN/EN55035 , BS EN/EN61204-3		
	Parameter	Standard	Test Level / Note
	ESD	BS EN/EN61000-4-2	Level 4, 15KV air ; Level 4, 8KV contact
	Radiated Field	BS EN/EN61000-4-3	Level 3
	EFT / Burst	BS EN/EN61000-4-4	Level 3
	Surge	BS EN/EN61000-4-5	Level 4, 2KV / Line-Line, Level 4, 4KV/ Line-Earth
	Conducted	BS EN/EN61000-4-6	Level 3
	Magnetic Field	BS EN/EN61000-4-8	Level 4
	Voltage Dips and Interruptions	BS EN/EN61000-4-11	>95% dip 0.5 periods, 30% dip 25 periods> 95% interruptions 250 periods

OTHERS		
	MTBF	1174.0K hrs min. Telcordia SR-332(Bellcore) ; 108.3K hrs min. MIL-HDBK-217F (25℃)
	DIMENSION	85.5*125.2*128.5mm (W*H*D)
	PACKING	1.51Kg ; 8pcs/13Kg/1.16CUFT

NOTE

1. All parameters NOT specially mentioned are measured at 400VAC input, rated load and 25℃ of ambient temperature.
2. Ripple & noise are measured at 20MHz of bandwidth by using a 12" twisted pair-wire terminated with a 0.1uf & 47uf parallel capacitor.
3. Tolerance : includes set up tolerance, line regulation and load regulation.
4. Dual phase operation is allowed under certain derating to output load.
   Please refer to derating curves for details.
5. Installation clearances : 40mm on top, 20mm on the bottom, 5mm on the left and right side are recommended when loaded permanently with full power.
   In case the adjacent device is a heat source, 15mm clearance is recommended.
6. The power supply is considered as an independent unit, but the final equipment still need to re-confirm that the whole system complies with the EMC directives. For guidance on how to perform these EMC tests, please refer to "EMI testing of component power supplies."
7. The ambient temperature derating of 3.5℃/1000m with fanless models and of 5℃/1000m with fan models for operating altitude higher than 2000m(6500ft).
   (as available on http://www.meanwell.com)

※ Product Liability Disclaimer : For detailed information, please refer to https://www.meanwell.com/serviceDisclaimer.aspx

File Name:TDR-480-SPEC 2022-12-02

MEAN WELL

480W Three Phase Industrial DIN RAIL with PFC Function **TDR-480 series**

■ Block Diagram

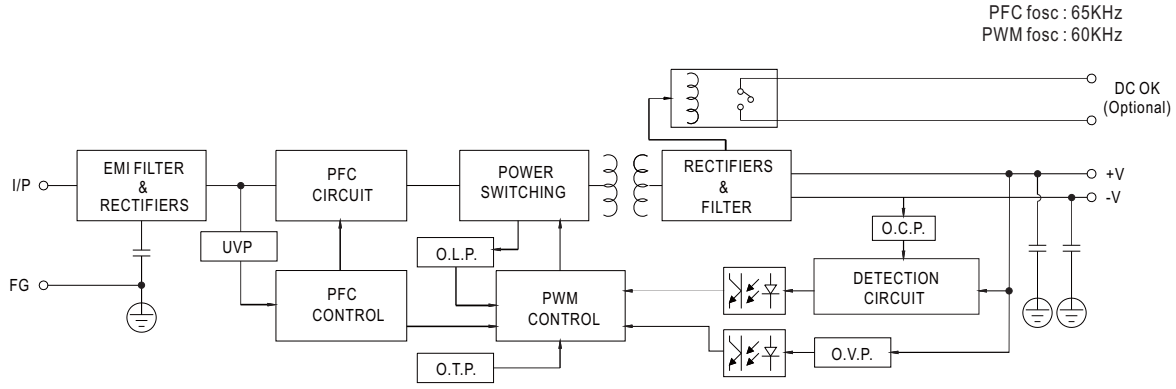

■ Derating Curve

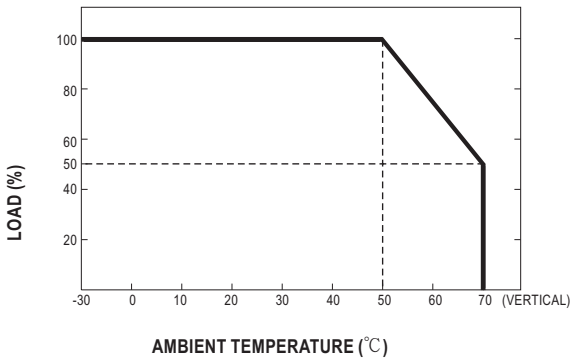

■ Output derating VS input voltage

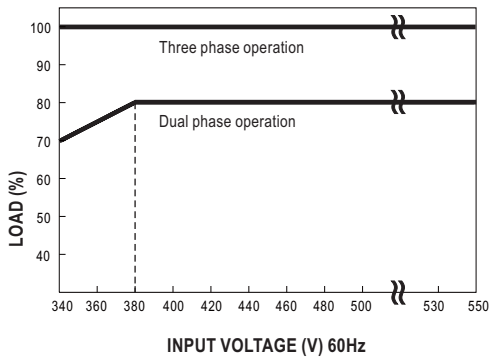

■ DC OK Relay Contact (Optional)

Contact Close	PSU turns on / DC OK.
Contact Open	PSU turns off / DC Fail.
Contact Ratings (max.)	60VDC/0.3A, 30VDC/1A, 30VAC/0.5A resistive load.

Control Pin (Optional) : DINKLE ECH250R-02P or equivalent (CN25)

Pin No.	Assignment	Mating Housing	Wire Diameter
1,2	DC OK Relay Contact	Dinkle ESC250V-02P or equivalent (Including in the package)	0.081~0.517mm² (20~28AWG)

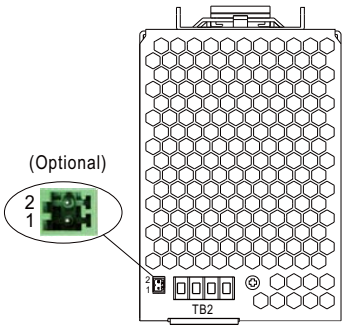

※ Please contact MEAN WELL for more details.

File Name:TDR-480-SPEC 2022-12-02

480W Three Phase Industrial DIN RAIL with PFC Function **TDR-480 series**

■ Mechanical Specification

Case No.984E Unit:mm

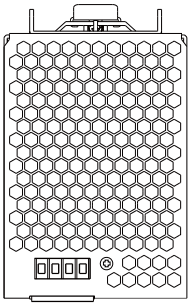

Top View

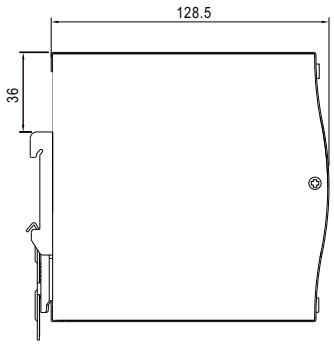

Side View

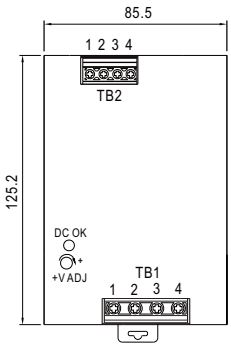

Front View

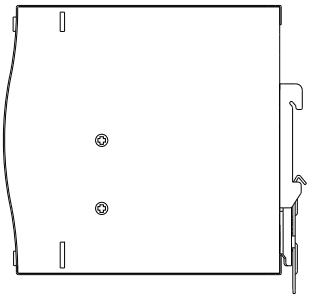

Side View

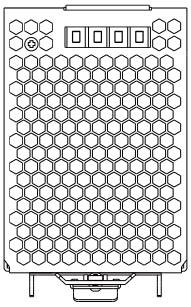

Bottom View

Terminal Pin No. Assignment (TB1)

Pin No.	Assignment
1	PE ⏚
2	AC/L3
3	AC/L2
4	AC/L1

Terminal Pin No. Assignment (TB2)

Pin No.	Assignment
1,2	DC OUTPUT +V
3,4	DC OUTPUT-V

■ Installation Instruction

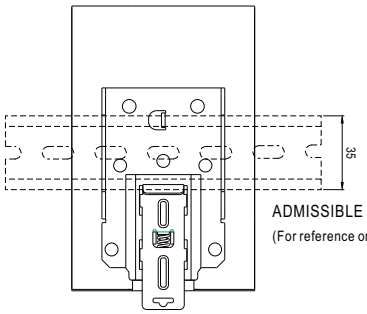

ADMISSIBLE DIN-RAIL:TS35/7.5 OR TS35/15

(For reference only. Not included with unit.)

Back View

This series fits DIN rail TS35/7.5 or TS35/15.
For installation details, please refer to the Instruction manual.

■ Installation Manual

Please refer to : http://www.meanwell.com/manual.html

File Name:TDR-480-SPEC 2022-12-02

Angst+Pfister
Sensors and Power

We are here for you. Addresses and Contacts.

Headquarter Switzerland:

Angst+Pfister Sensors and Power AG
Thurgauerstrasse 66
CH-8050 Zurich
Phone +41 44 877 35 00
sensorsandpower@angst-pfister.com

Office Germany:

Angst+Pfister Sensors and Power Deutschland GmbH
Edisonstraße 16
D-85716 Unterschleißheim
Phone +49 89 374 288 87 00
sensorsandpower.de@angst-pfister.com

Scan here and get an overview of personal contacts!

sensorsandpower.angst-pfister.com