SGX SENSORTECH
An Amphenol Company

Integrated IR Butane Datasheet

DS-0313 INIR-BU1.8%, ISSUE 1
Copyright © SGX Sensortech 2012-2020

Integrated IR FEATURES

- Gas Sensor with **Automatic Switchover** between ranges,
- **High Resolution** up to 20ppm,
- **Detectivity Level** at 100ppm,
- **Multi-sensor mode**,
- Analog Output of gas concentration,
- Serial port communication,
- **Internal Temperature** sensor
- Active & Reference **Signals Monitored**
- Full **Faults Diagnostics** & **Error Generation**
- Cyclic Redundancy Check (**CRC**)
- **Typical Low power** consumption < 100mW (Average)
- **Factory calibrated** for Butane
- **Evaluation Kit** available including **PC software** for easy testing and production calibration functions
- Easy implementation into **Sensors Network**
- Design for use in Hazardous Areas
- **Certified Sensor** for use in Explosive Atmospheres (EX)

GENERAL DESCRIPTION

The Integrated IR (INIR) sensor has been designed with the latest technology, using a microcontroller with an ARM7 core and via software design the necessary techniques have been implemented to increase the reliability of the device therefore minimize the probability of faults.

The INIR is a user friendly digital Gas Sensor, which is designed to use the latest SGX Sensortech's Infrared technology.

The sensor is designed to decrease the implementation time therefore increase productivity. The Integrated IR sensor incorporates the necessary electronics and embedded software to operate from a low voltage DC power supply. The sensor will process the raw signals to output a linear, temperature compensated signal proportional to the gas concentration applied. The output signal is available in digital and analogue forms.

The SGX Sensortech Integrated IR Gas Sensor provides users with a simple method of incorporating an Infrared Sensor into their gas detection instrument which will significantly reduce the development time and expertise required during the design and implementation phase. The Integrated IR can also be factory calibrated to allow installation without the need for recalibration.

RECOMMENDED APPLICATIONS

- **Automation & Control**
- **Indoor Air Quality**
- **Industrial Health & Safety**

Copyright © SGX Europe Sp. z o.o. 2012-2020

Experts on Design-In
Angst+Pfister Sensors and Power

TECHNICAL SPECS

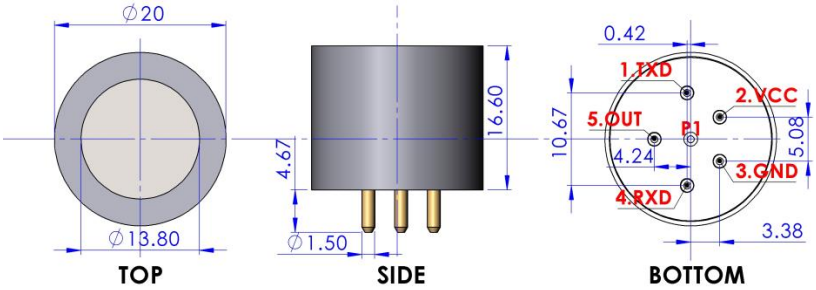

ABSOLUTE MAXIMUM RATINGS

Power Supply	Min	Typical	Max
Supply Voltage	3.2 VDC	3.3 VDC	5.25 VDC
Average Current Consumption	30mA	32mA	35 mA*
	*Inrush Current can be up to 65mA		
Logic Outputs Level	LOW Voltage Level(VOL) : 0.6V Maximum HIGH Voltage Level(VOH): 2.0V Minimum 1.6mA source current maximum		
Logic Inputs Level	LOW Voltage Level(VINL): 0.4V Maximum HIGH Voltage Level(VINH): 2.0V Minimum		
Humidity			
Operating Humidity	0%	50%	99%
Storage Humidity	0%	50%	90%
Condensation (>100% Humidity)	Sensor's Detection Limit, Stability & Linearity would be affected, algorithms are implemented to minimize as the effect.		
Temperature			
Operating Temp.	-40 °C	+20 °C	+75 °C
Storage Temp.	-20 °C	+20 °C	+55 °C
Temp. Cycle Limits		0.8°C/min	1.3°C/min
Pressure (Compensation will be required)			
Operating Pressure	80kPa	-	120kPa
Storage Pressure	80kPa	-	120kPa
Performance			
DAC Resolution	12-Bit at 0.0-2.5 Volts DC Max Scalable according to Gas Conc. Operating Range		
Digital signal format	8 data bits, 1 stop bit, no parity		
Standard baud rate	38400 as default, 115200, 19200, 9600		
Dimensions			
Diameter (D)	19.9mm	20mm	20.1mm
Height (H)	16.50mm	16.60mm	16.70mm
Pins Height (pH)	4.0mm	4.8mm	5.6mm
Body Material	Stainless Steel		
Weight	25 g	29 g	33 g
Gas Sensor Sockets			
S1	5-Pin , Polygon Topology		

PIN CONFIGURATION

Pin	Name	Description
1	**TXD**	Data transmitted from the Integrated IR.
2	**+VCC**	3.2 Volts – 5.25 Volts DC input to Integrated IR
3	**GND**	GND Plane, 0 Volts reference for Integrated IR
4	**RXD**	Data received by the Integrated IR.
5	**OUT**	Analog Output. Scalable range, see Application Note 1 Integrated IR Protocol & Calibration for details.
Pad	**Pad**	Bootloader Pad. Not used by the customer.

NOTE1: All Dimensions in mm. All tolerances Linear +/- 0.1mm and Angular 0.5° unless otherwise stated.

NOTE2: Do not solder pins. INIR Series sensors are designed to press-fit into PCB sockets. The end-user should choose a socket to accommodate the full sensor pin length. This will ensure a stable mechanical location as well as good electrical contact. SGX Sensortech recommend the Wearns Cambion type 450-1813-01-03-00 single-pole solder mount socket with through hole, or a suitable equivalent.

Copyright © SGX Europe Sp. z o.o. 2012-2020

Experts on Design-In
Angst+Pfister Sensors and Power

DESIGN CONSIDERATIONS & APPLICATIONS

Warm-Up Time

The Warm-Up Time for the INIR sensor is 45 seconds after each power "ON" or every time when we are changing from Configuration to Normal/Engineering Mode. During this time data are not valid. Please read Fault codes in Application Note 1, "Integrated IR Protocol & Calibration"

The Warm-Up time is not including the period that the sensor needs to reach the ambient temperature. The sensor though is capable of producing readings during the Warm-Up but with a much higher error than specifications.

Calibration

For calibration process please read the appropriate Application Note 1, "Integrated IR Protocol & Calibration". For optimum performance please use following cylinders:

INIR-BU1.8% (Butane)
100% Nitrogen for Zero calibration
1.3% C_4H_{10} for High Span Cal.

Always do Zero Calibration first followed by High Span.

Gas Flow Rate

For valid evaluation and to keep tests consistent it is recommended to use 450 – 500 cc/min. flow rate to minimize any effects due to pressure variations in the INIR.

Digital Interface/Communication

In terms of the Software implementation, we will need a way to read the Digital Output by using a Microcontroller (MCU) or a Personal Computer (PC) is required. The Software with the Evaluation Kit is compatible with Windows Operating System only and at the moment is not possible to read the Analogue output by using the Evaluation Software.

Faults Monitoring/Error States

The Error monitoring and Fault generation happens every second transmitted by the UART. Regularly check all the Faults generated from the INIR to ensure errorless communication and rise appropriate alarms depending on the Fault code. For further information on the different Faults and how to translate them, please read the Application Note 1, "Integrated IR Protocol & Calibration".

Analogue Output

The Analogue Output is updated every one second. Analogue voltage is directly related with the Concentration.

Condensation, Dust & Extreme Conditions

Using the INIR in extreme environmental conditions may affect its performance. Typically, the module has a high corrosion resistance and temperature compensated linearized output. The INIR implements an Condensation Compensation Algorithm to minimize the effect especially after power "ON", eliminating the problem with false alarm. The Sensor can withstand multiple thermal shocks that don't exceed 1.3°C/min temperature slopes. In applications like mining where dust or other particles are present is recommended to use a dust filter firmly attached to the inlet of the INIR Gas Sensor. The filter tends to increase response times T90, T10 and T50 therefore ensure correct installation and evaluation to comply with regulations in your country. If your device is intended to be used in a hazardous environment, please seek advice from a certification body.

Pressure Compensation

The INIR will definitely need pressure compensation irrelevant if the pressure is within the operating pressure. Re-Zero the INIR Gas Sensor under operating conditions is recommended; this will minimize the pressure effects, temperature differential effects but will not eliminate the weather effects like extreme wind velocity, rain or lighting.

Copyright © SGX Europe Sp. z o.o. 2012-2020

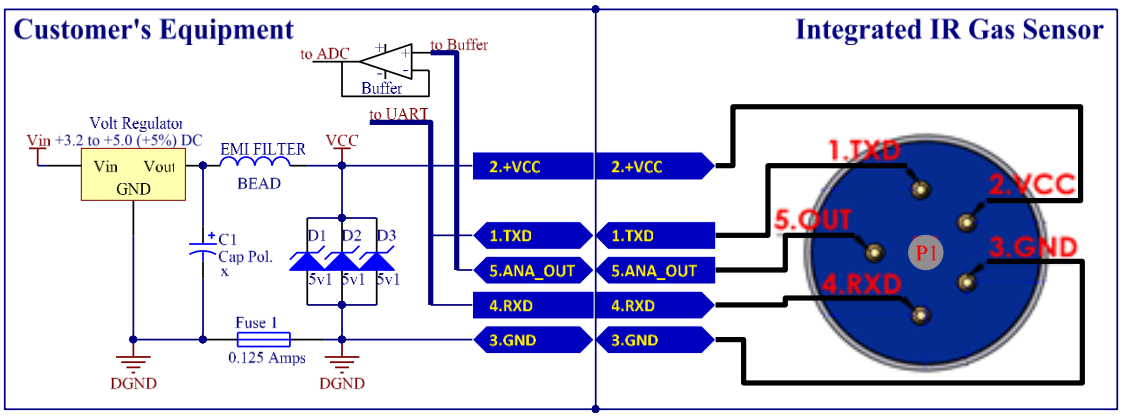

Fig. 1 -Example schematic for Interfacing Integrated IR (INIR)

TYPICAL PERFORMANCE CHARACTERISTICS

(All Characteristics are related to a calibrated sensor and conditions, Temperature 20°C, Relative Humidity 10%RH, Pressure 101kPa, 500 to 1000 ml/min Gas Flow, Averaging of 20 values, unless otherwise stated.)

Test	INIR-BU1.8%
Stabilisation or Warm-up Time (EN) *1	0%v.v ±0.1%Vol in 45 seconds
Calibration Curve (EN) or Basic Error (AQ)	0 to 100% of full range -> 0.06%v.v or ±6% of Reading whichever is greater.
Short Term Stability (EN) of the Displayed Value(AQ)	0%v.v = ±0.005%v.v 1.8%v.v = ±0.05%v.v
Minimum Resolution (AQ)	From 0 to 1.8%v.v -> ±0.002%v.v
Long Term Stability (EN) or Working Stability (AQ)	0%v.v = ±0.03%v.v / Month 1.8%v.v = ±0.1%v.v / Month
Temperature Error *(with Compensation)* *2 *(-40°C to +75°C, relative to 20°C)*	0%v.v to 1.8%v.v = ±0.05%v.v
Humidity Error *(10%RH to 90%RH, relative to 45%RH)*	0%v.v = ±0.05%v.v 1.8%v.v = ±0.1%v.v
Response Time *3 **(without dust filter)**	T_{90} < 40 sec
Power Supply Variations (at ±5% of Nominal Voltage)	*The Performance of the INIR is not affected by power supply variations as long as the power supply provides DC Regulated voltage according to specifications.*
Power Supply Rejection Ration (PSRR) (at ±5% of Nominal Voltage)	at 1 MHz -> 50 dB , at 100 kHz -> 68 dB , at 10 kHz -> 88 dB
Temperature Cycling or Ramping Drift (Maximum at 1.3°C/min.)	0%v.v = ±0.05%v.v 1.8%v.v = ±0.2%v.v
Thermal Shock Drift	0%v.v = ±0.05%v.v (max)
Uncertainty Error of Calibration	±0.15% Error of the Actual Reading

*1 Wait for 45 mins for the Sensor to warm up and reach the Ambient Temperature after power on.
*2 NOTE: Additional errors caused by relatively high boiling point of Butane (-1°C) might cause additional measurement errors at negative temperatures.
*3 NOTE: All data and tests are relating to EN 60079-29-1 and AQ 6211, European and Chinese standards. For more information about Average please read the Application Note 1, "Integrated IR Protocol & Calibration". Response time at lower temperatures might be affected due to low vapor pressure.

Copyright © SGX Europe Sp. z o.o. 2012-2020

CERTIFICATIONS DETAILS

	ATEX	IECEx
Certificate	Sira 99ATEX1121U	IECEx SIR 04.0031U
Standards	EN 60079-0:2012, IEC 60079-1:2014 Ed. 7	IEC 60079-0:2011 Ed.6, IEC 60079-1:2014-06 Ed.7
Product Marking	II 2G Ex db IIC Gb Ta -40ºC to +75ºC	Ex db IIC Gb
Special Conditions for Safe Use	**Power Input:** 1.5W Maximum **Ambient temperature range:** -40ºC to +75ºC **Condition 1:** The thermal resistance of the Gas Sensing Heads do not exceed 25K/W. This shall be taken into account when considering its surface temperature and the temperature classification of the equipment into which it is to be incorporated. Tests indicated that an internal ignition increases the temperature of the mesh by further 4.2K (including a 1.2 safety factor). **Condition 2:** The Gas Sensing Heads shall be protected from impact in service. The Gas Sensing Head shall be mounted in a protective enclosure such that an impact of 7 J in accordance with IEC 60079-0:2007 clause 26.4.2 from any direction shall not cause the impact head to make contact with the Sensing Head. **Condition 3:** The Gas Sensing Heads are dust-proof (IP5X) but offers no protection against the ingress of water. Where protection in excess of IP50 is required, then the apparatus into which the Gas Sensing Head is installed shall provide the necessary ingress protection (for example by fitting an external semi-permeable membrane).	
Manufacturing & Certificate Address	SGX Europe sp. z o.o., 40-568 Katowice, 103 Ligocka str., Poland	

TYPICAL PERFORMANCE DATA

(All Data are related to a calibrated sensor and conditions: Temperature 20ºC, Relative Humidity 10%RH, Pressure 101kPa, 500 to 1000 ml/min Gas Flow, Averaging of 13 values, unless otherwise stated.)

INTENDED USE

This device has been designed to be used as component together with instruments to detect flammable gas of certain concentrations.

WARRANTY & WARNING

The WARRANTY for all the INIR Gas Sensors is 2 years from the purchased date based on use according to this document and the INIR Application Note.

Warranty period or any extended warranties would be confirmed with the order confirmation.

The warranty is invalidated if the sensor is used under conditions other than those specified in this datasheet.

In addition, please pay attention to the following conditions as they will void immediately the WARRANTY:

1. **Do not allow water condensing into the sensor or deep the sensor into water.**
2. **Do not vandalize the sensor.**
3. **Do not change label or cover it with other stickers.**
4. **Do not over voltage or overcurrent the sensor; always observe the correct polarity of the input.**
5. **Do not solder directly onto the pins, pads or the external body of the sensor.**
6. **Do not drop on the floor or hit it with tools.**
7. **Do not open, cut or break sensor apart.**
8. **Do not expose the sensor to high levels of dust.**
9. **Do not expose the sensor to corrosive gases or operate under corrosive environments.**
10. **Do not paint or mark the sensor externally.**
11. **Do not use in acid environment or operate under gases containing acid vapours or particles.**
12. **Do not custom modify the sensor.**
13. **Do not clean the sensor with acid.**
14. **Recalibrating the sensor will only void the calibration certificate not the warranty.**

ESD PRECAUTION

ESD (Electrostatic Discharge) sensitive device. Charged devices and circuit boards can discharge without detection. Although this product features patented or proprietary subjected circuitry, damage may occur on devices subjected to high energy ESD. Therefore, proper ESD precautions should be taken to avoid performance degradation or loss of functionality.

***Warning!* Plugging or Unplugging the Sensor while in operation may damage the device beyond repair. Always power down the instrument when performing maintenance.**

HANDLING PRECAUTIONS

A. Do not drop the Integrated IR on the floor as this could cause damage to the pins or internal components.
B. Avoid mechanical force against pins or sockets. Protect from dust and sprayed acidic particles .
C. Do not immerse in water or other fluids.
D. Do not solder the module directly onto a pcb or to wires. Excessive heat could cause damage.

Copyright © SGX Europe Sp. z o.o. 2012-2020

ROHS COMPLIANCE

Under the EU Directives, compliance testing is necessary for Pb, Cd, Hg, Cr (VI) and Br. The RoHS directive is effective since July 1, 2006. The regulations prohibit the use of these hazardous substances in new products sold after July 2003.

WEEE DIRECTIVE

WEEE (Waste from Electrical and Electronic Equipment) is a directive that controls how electric and electronic equipment is handled and recycled effective since August 13, 2005. INIR clustered as component and SGX do not need to have a recycling scheme in place but manufacturers may need to ensure WEEE compliance for their systems.

ATEX/IECEx CERTIFICATIONS

The ATEX directive consists of two EU directives describing what equipment is allowed in an environment with an explosive atmosphere. The Integrated IR is certified for ATEX (Sira 99ATEX1121U) and IECEx (Sira 04.0031U), see page 5 for more details.

II 2G
Ex db IIC Gb
Ta -40ºC to +75ºC

Angst+Pfister
Sensors and Power

We are here for you. Addresses and Contacts.

Headquarter Switzerland:

Angst+Pfister Sensors and Power AG
Thurgauerstrasse 66
CH-8050 Zurich
Phone +41 44 877 35 00
sensorsandpower@angst-pfister.com

Office Germany:

Angst+Pfister Sensors and Power Deutschland GmbH
Edisonstraße 16
D-85716 Unterschleißheim
Phone +49 89 374 288 87 00
sensorsandpower.de@angst-pfister.com

Scan here and get an overview of personal contacts!

sensorsandpower.angst-pfister.com