HX-P510 SERIES

0 to 5, 0 to 10, ±5, ±10 VDC ANALOG OUTPUT

The HX-P510 series transducer offers a voltage output with wide adjustability to give a 0 to 5, 0 to 10, ±5 or ±10 VDC output. The device may be powered with an unregulated voltage in the range of 4.9 to 30 VDC. Zero and span adjustment potentiometers are readily accessible. With the zero position set anywhere within the first 30% of total travel, the span may be adjusted to give a full 0 to 5 or 0 to 10 VDC output with the span set anywhere within the last 20% of travel. Alternatively, the zero position may be set anywhere between 10% and 90% of full travel to give an output of ±5 or ±10 VDC with the span set between 50% to 100% of the longest travel from the zero position.

SPECIFICATIONS

GENERAL

Available Measurement Ranges	See Supplemental Data[1], Table 12
Sensing Device	Precision Potentiometer
Connector	MS3102E-14S-6P
Mating Connector (included)	MS3106E-14S-6S

PERFORMANCE

Linearity	
2", 3", 4", 5" & 6"Ranges	±0.30% Full Scale
10", 15", 20" & 25" Ranges	±0.20% Full Scale
All other ranges	±0.15% Full Scale
Repeatability	±0.015% Full Scale
Resolution	Essentially Infinite

ENVIRONMENTAL

Operating temperature	-40°C to +85°C
Storage Temperature	-55° to +100°C
Operating humidity	100%
Vibration	15 G's 0.1 ms max.
Shock	50 G's 0.1 ms max.

INGRESS PROTECTION (Exclusive of Wire Rope Area)

Standard	NEMA 4 (IP-65)
Optional	NEMA 6 (IP-68)

ELECTRICAL

Output	0 to 5 or 10 VDC, ±5 or ±10 VDC
Excitation Voltage	4.9 to 30 VDC
Excitation Current	25 mA max.
Output Impedance	10Ω max.
Output Load	5KΩ min.
ADJUSTMENT RANGE–0 to 5 or 0 to 10 VDC	
Zero	0 to 30% of Range
Span	80% to 100% of Range
ADJUSTMENT RANGE–±5 or ±10 VDC	
Zero	10% to 90% of Range
Span	50% to 100% of Longest Possible
Travel from Zero Position	
Protection	Reversed Polarity
Temperature Stability	0.02%/°C of Span

CONNECTION DIAGRAM

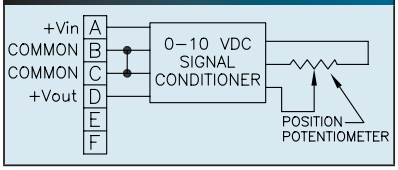

FOOTNOTES TO SPECIFICATIONS

1. Supplemental Data section located at end of HX Series pages.

MODEL NUMBER CONFIGURATION

HX-P510- ⓪ - ①②③ - N O ⑥ - ⑦⑧⑨

BASIC CONFIGURATION (FOR ALL RANGES)

HX-P510-50-S10-N0S-1BC

⓪ RANGE

Select Measurement Range From Supplemental Data, **Table 12** on Page 38, Insert Corresponding Measurement Range Designator

① WIRE ROPE

S ..... Stainless Steel
(See Supplemental Data, Table 12)

N ..... Ø.018 (0,45 mm)
Nylon Jacketed Stainless Steel
Ranges to 80" (2m) only. (formerly NJC)

J ..... Ø.037 (0,94 mm)
Nylon Jacketed Stainless Steel
Ranges 100" (2.5m) to 500" (12.7m) only.

② WIRE ROPE TENSION

1 ..... Standard

2 ..... Reduced (Ranges to 80" only)

③ WIRE ROPE EXIT DIRECTION

U se Number designators shown

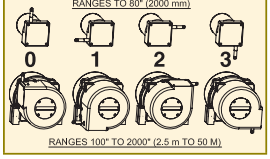

⑥ ELECTRICAL OUTPUT POLARITY

S ..... Standard (increasing output as wire rope is extended)

R ..... Reversed (decreasing output as wire rope is extended)

NOTES FOR OPTION BOXES 7 , 8, and 9

IP-65 (NEMA 4): Transducer equipped with body mounted connector and with or without mating connector. Mating connector with electrical cable available separately as part number **10119-xM** where 'x' is length of electrical cable in meters.

IP-68 (NEMA 6): Transducer equipped with bulkhead fitting and length of electrical cable. Remote end of electrical cable may be outfitted with water proof connector. Mating connector with electrical cable available separately as part number **10424-xM** where 'x' is length of electrical cable in meters.

⑦ INGRESS PROTECTION

1 ..... IP-65 (NEMA 4)

2 ..... IP-68 (NEMA 6)

3 ..... IP-68 (NEMA 6) Corrosion Resistant Construction

⑧ IP-65–NEMA 4 CONNECTOR

B ..... 6 Pin 3102E Body Mounted Connector

IP-68–NEMA 6 ELECTRICAL CABLE

P ..... Bulkhead Fitting w/ 0.3m (12") Electrical Cable

3 ..... Bulkhead Fitting w/ 3m (10') Electrical Cable

4 ..... Bulkhead Fitting w/ 4m (13.5') Electrical Cable

5 ..... Bulkhead Fitting w/ 5m (16.5') Electrical Cable

6 ..... Bulkhead Fitting w/ 6m (20') Electrical Cable

7 ..... Bulkhead Fitting w/ 7m (23') Electrical Cable

⑨ IP-65–NEMA 4 MATING CONNECTOR

C ..... IP-65 Mating Connector Included

K ..... IP-65 Mating Connector Omitted*

*Electrical cable with mating connector may be ordered separately as part number **10119-xM** where 'x' is the length required in meters.

IP-68–NEMA 6 CABLE MOUNTED CONNECTOR

N ..... No connector on end of electrical cable

K ..... IP-68 Cable to cable connector with no mating connector**

Electrical cable with mating connector may be ordered separately as part number **10424-xM where 'x' is the length required in meters. Mating connector alone unavailable.

HX SERIES
SUPPLEMENTAL DATA

OPTION DESCRIPTIONS

OPTION	OPTION DESIGNATOR	DESCRIPTION
WIRE ROPE NYLON JACKETED WIRE ROPE *RANGES TO 80" ONLY*	N	Replaces standard stainless steel wire rope with Ø.018 nylon jacketed wire rope. This option increases wire rope life dramatically but may increase non-linearity by as much as ±.05% of full scale.
NYLON JACKETED WIRE ROPE *RANGES 100" TO 500" ONLY*	J	Replaces standard stainless steel wire rope with Ø.037 nylon jacketed wire rope.
WIRE ROPE EXIT DIRECTION ALTERNATE WIRE ROPE EXIT *RANGES TO 80" (2.0 m)*	1, 2, 3	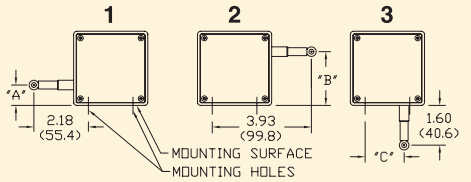 RANGE / "A" / "B" / "C" 2", 10" / 1.12 (28.4) / 1.79 (45.5) / 1.21 (30.7) 3", 15", 30" / .96(24.4) / 1.95 (49.5) / 1.37 (34.8) 4", 20", 40" / .80 (20.3) / 2.11 (53.6) / 1.53 (38.9) 5", 25", 50" / .64 (16.3) / 2.27 (57.7) / 1.69 (42.9) 6", 60" / .49 (12.4) / 2.42 (61.5) / 1.84 (46.7) 80" / .25 (6.4) / 2.66 (67.6) / 2.08 (52.8) (dimensions in brackets are millimeters)
ALTERNATE WIRE ROPE EXIT *RANGES 100" (2.5 m) and GREATER*	1, 2, 3	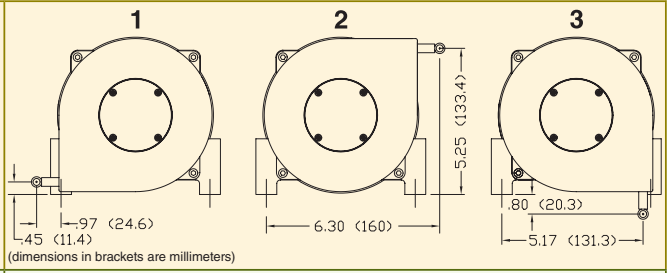 (dimensions in brackets are millimeters)
POTENTIOMETER VALUE NON-STANDARD POTENTIOMETER *APPLIES TO HX-PA & HX-VPA ONLY*	2, 3, 4	Non-standard potentiometer linearity is as follows: RANGE / LINEARITY 5" and Below / ±1.00% of full scale 10" to 25" / ±0.50% of full scale 30" and above / ±0.25% of full scale ***Note:*** *This option is subject to potentiometer availability.*
ELECTRICAL OUTPUT POLARITY REVERSED OUTPUT	R	Output is at a maximum when wire rope is fully retracted. Output decreases as wire rope is extended. Does not apply to velocity signal.
INGRESS PROTECTION NEMA 6, IP-68 CAPABILITY	2	Connector is replaced with a bulkhead fitting and a designated length of urethane jacketed, shielded, twisted pair cable. Retraction mechanism and electrical components are sealed to NEMA 6, IP-68 capability.
CORROSION RESISTANT CONSTRUCTION	3	All external anodized aluminum parts of transducer are replaced with stainless steel and corrosion resistant plastic. Transducer is sealed to NEMA 6, IP-68 capability. Urethane jacketed, shielded, twisted pair cable exits unit. No connector on unit.

HX SERIES
SUPPLEMENTAL DATA

MECHANICAL SPECIFICATIONS

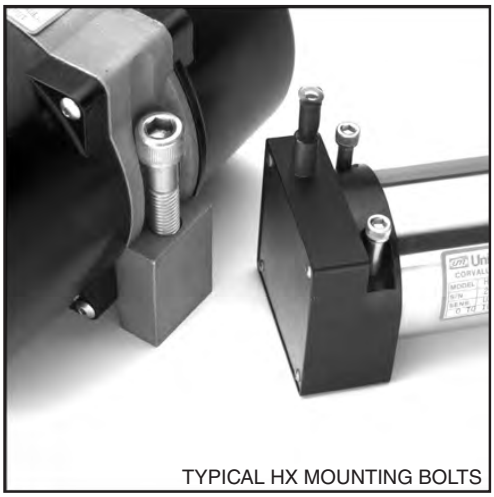

TYPICAL HX MOUNTING BOLTS

AVAILABLE MEASUREMENT RANGES .... See Table 12

CONSTRUCTION

Ranges 80" (2 m) and under	Anodized Aluminum Mounting Base Stainless Steel & Anodized Aluminum Housing
Ranges 100" (2.5 m) and greater	Stainless Steel Mounting Base High Impact, Corrosion Resistant Thermoplastic Housings
Wire Rope Tension	See Table 12
Wire Rope Diameter	See Table 12
Weight	See Table 12
Connector	MS3102A-14S-6P
Mating Connector	MS3106E-14S-6S
Optional NEMA 6 Capability	Bulkhead fitting with shielded twisted pair cable

Life[1]

Ranges 2" to 6"	5,000,000 full stroke cycles
Ranges 10" to 25"	500,000 full stroke cycles
Ranges 30" to 400"	250,000 full stroke cycles
Ranges 500" to 2000"	200x10⁶ lineal inches

NOTES:
1. With 1K ohm potentiometer, wire rope misalignment 2° maximum at full stroke, relatively dust free environment, nylon jacketed wire rope on units with ranges 80" and less.

Use value from this column to indicate over-all measurement range

Check mark indicates available measurement range

TABLE 12

MEASUREMENT RANGE DESIGNATOR	STANDARD MEASUREMENT RANGES		APPLICABLE SERIES			WIRE ROPE TENSION (NOMINAL)		WIRE ROPE DIAMETER		TRANSDUCER WEIGHT		Product Photo
	(in)	(mm)	HX-PA HX-PB HX-P420 HX-P510	HX-EP	HX-V HX-VP	(oz)	(N)	(in)	(mm)	(lb)	(Kg)	
2	2	50	✔	-	✔	34	9.4	.016	0.4	2	0.9	
3	3	75	✔	-	✔	24	6.7	.016	0.4	2	0.9	
4	4	100	✔	-	✔	24	6.7	.016	0.4	2	0.9	
5	5	125	✔	-	✔	19	5.3	.016	0.4	2	0.9	
6	6	150	✔	-	✔	24	6.7	.016	0.4	2	0.9	
10	10	250	✔	✔	✔	34	9.4	.016	0.4	2	0.9	
15	15	390	✔	-	✔	24	6.7	.016	0.4	2	0.9	
20	20	500	✔	-	✔	24	6.7	.016	0.4	2	0.9	
25	25	640	✔	✔	✔	19	5.3	.016	0.4	2	0.9	
30	30	750	✔	-	✔	24	6.7	.016	0.4	2	0.9	
40	40	1000	✔	-	✔	24	6.7	.016	0.4	2	0.9	
50	50	1250	✔	✔	✔	19	5.3	.016	0.4	2	0.9	
60	60	1500	✔	✔	✔	24	6.7	.016	0.4	2	0.9	
80	80	2.0m	✔	✔	✔	21	5.8	.016	0.4	2	0.9	
100	100	2.5m	✔	✔	✔	36	10.0	.024	0.6	6.8	3.1	
120	120	3.0m	✔	✔	✔	36	10.0	.024	0.6	6.8	3.1	
150	150	3.8m	✔	✔	✔	36	10.0	.024	0.6	6.8	3.1	
200	200	5.0m	✔	✔	✔	36	10.0	.024	0.6	6.8	3.1	
250	250	6.3m	✔	✔	✔	36	10.0	.024	0.6	6.8	3.1	
300	300	7.5m	✔	✔	✔	36	10.0	.024	0.6	6.8	3.1	
350	350	8.8m	✔	✔	✔	36	10.0	.024	0.6	6.8	3.1	
400	400	10.0m	✔	✔	✔	36	10.0	.024	0.6	6.8	3.1	
500	500	12.5m	✔	✔	✔	36	10.0	.024	0.6	8.6	3.9	
600	600	15.2m	✔	✔	✔	36	10.0	.024	0.6	8.6	3.9	
800	800	20.3m	✔	✔	✔	36	10.0	.024	0.6	8.6	3.9	
1000	1000	25.4m	✔	✔	-	36	10.0	.024	0.6	12.0	5.4	
1200	1200	30.4m	✔	✔	-	36	10.0	.024	0.6	12.3	5.6	
1600	1600	40.6m	✔	✔	-	36	10.0	.024	0.6	14.1	6.4	
1800	1800	45.7m	✔	✔	-	36	10.0	.021	0.6	15.9	7.2	
2000	2000	50.8m	✔	✔	-	36	10.0	.021	0.5	16.3	7.4	

Specifications subject to change without notice

HX SERIES
SUPPLEMENTAL DATA

DIMENSIONAL INFORMATION

HX SERIES | RANGES 80" (2 m) OR LESS

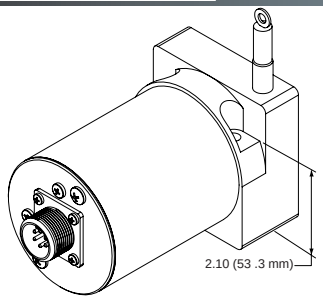

FIG. 1

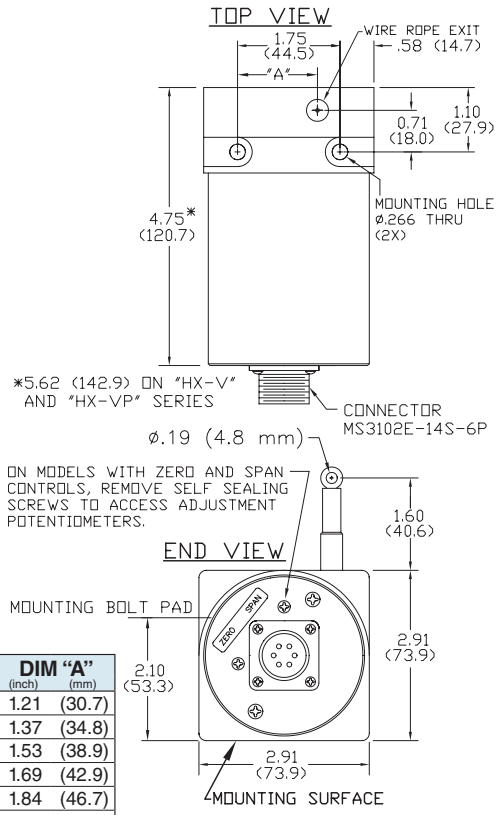

[dimensions in brackets are millimeters]

TABLE 13

RANGE	DIM "A" (inch)	(mm)
2", 10"	1.21	(30.7)
3", 15", 30"	1.37	(34.8)
4", 20", 40"	1.53	(38.9)
5", 25", 50"	1.69	(42.9)
60"	1.84	(46.7)
80"	2.08	(52.8)

NOTES:
1. Transducer mounts with Ø.25 or M6 socket head cap bolts.

HX SERIES | RANGES GREATER THAN 80" (2 m)

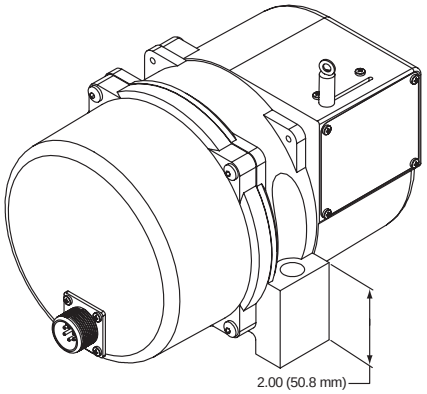

FIG. 2

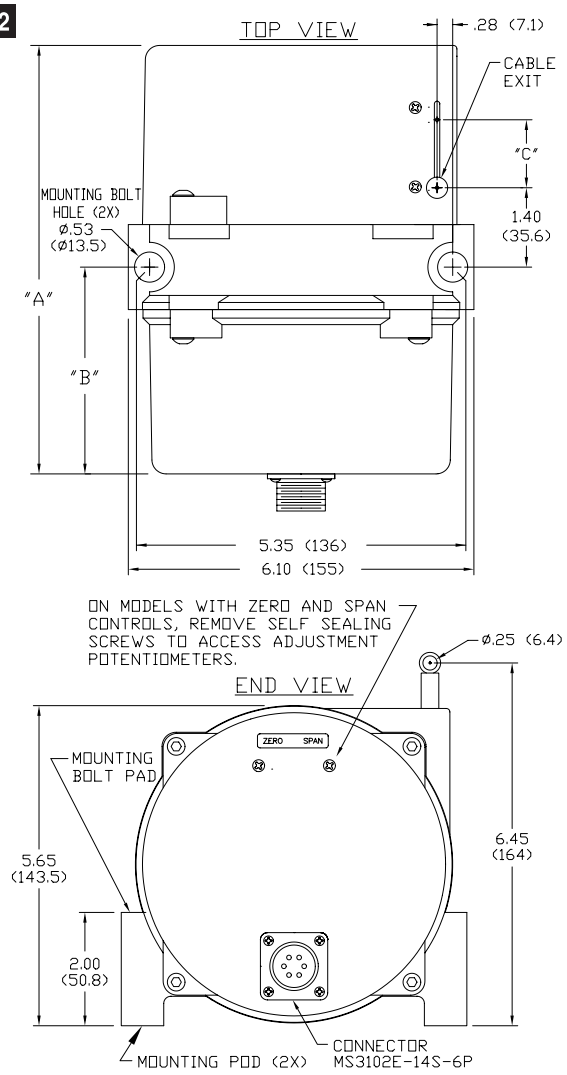

[dimensions in brackets are millimeters]

TABLE 14

RANGE	DIM "A" (inch)	(mm)	DIM "B" (inch)	(mm)
Ranges to 800"	7.70	(196)	3.80	(97)
1000" to 2000"	11.0	(280)	5.60	(142)

NOTES:
1. Transducer mounts with Ø.50 or M12 socket head cap bolts.
2. Dimension "C" is the cable offset that occurs as the cable is extended from the transducer. For "C" in inches, C = .0016 x E where E = extension in inches. For "C" in millimeters, C = .0016 x E where E = extension in mm.

Angst+Pfister
Sensors and Power

We are here for you. Addresses and Contacts.

Headquarter Switzerland:

Angst+Pfister Sensors and Power AG
Thurgauerstrasse 66
CH-8050 Zurich
Phone +41 44 877 35 00
sensorsandpower@angst-pfister.com

Office Germany:

Angst+Pfister Sensors and Power Deutschland GmbH
Edisonstraße 16
D-85716 Unterschleißheim
Phone +49 89 374 288 87 00
sensorsandpower.de@angst-pfister.com

Scan here and get an overview of personal contacts!

sensorsandpower.angst-pfister.com