ETMA 1 / 2 / 4 / 5 / 6

MAGNETIC INCREMENTAL LINEAR SENSOR

MAIN FEATURES

Incremental linear system based on magnetic principle without wear thanks to no-contact technology. Thanks to high IP rating ETMA is suitable for harsh environment applications such as marble and glass working machines, washing systems machines.

- Resolution up to 0,01 mm
- Power supply up to +30 V DC with several electrical interfaces available
- Up to 4 m/s travel speed
- IP 67 as protection grade
- Cable output, connector available on cable end

ORDERING CODE

ETMA	1	Z	5	L	S	PR3	. XXX

SERIES
magnetic incremental linear sensor ETMA

RESOLUTION
0,1 mm 1
0,04 mm 2
0,2 mm 4
0,5 mm 5
1 mm 6

ZERO PULSE
without zero pulse S
with zero pulse Z

POWER SUPPLY
(with L electrical interface) 5 V DC 5
5 ... 28 V DC 5/28

ELECTRICAL INTERFACE
push-pull P
line driver L
power supply 5/28 V - output RS-422 RS

ENCLOSURE RATING
IP 67 S

OUTPUT TYPE
cable length 3m PR3
preferred cable lengths 6 / 10 / 20 m, to be added after output type

VARIANT
custom version XXX

© Copyright 2020 Eltra S.p.a. Unipersonale. All rights reserved. All informations in this catalog are subject to change without notice.
Eltra takes no responsibility for typographic errors. For the terms of sales please check the website. REV. 191206

eltra@eltra.it

Experts on Design-In
Angst+Pfister Sensors and Power

ETMA 1 / 2

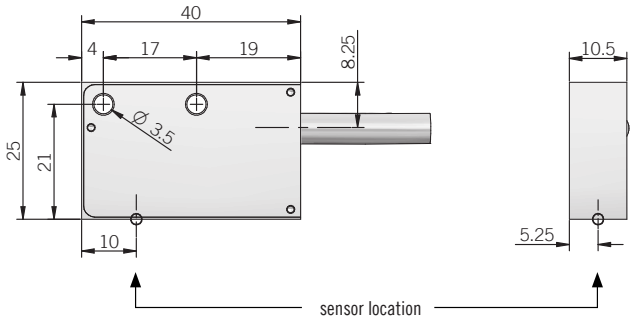

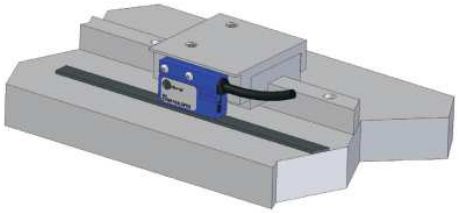

Mechanical tolerances

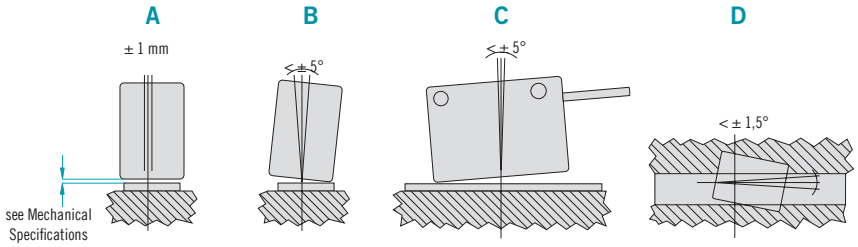

dimensions in mm

ELECTRICAL SPECIFICATIONS

Resolution	1 = 0,1 mm (0,025 mm after quad eval) 2 = 0,04 mm (0,01 mm after quad eval) 4 = 0,2 mm (0,05 mm after quad eval) 5 = 0,5 mm (0,125 mm after quad eval) 6 = 1 mm (0,25 mm after quad eval)
Zero pulse	ETMA 1 / 4 / 5 = every 5 mm ETMA 2 / 6 = every 2 mm
Power supply[1]	5 = 4,5 ... 5,5 V DC 5/28 = 4,5 ... 30 V DC (reverse polarity protection)
Current consumption without load	30 mA max
Max load current	20 mA / channel
Electrical interface[2]	push-pull / line driver HTL (AEIC-7272) line driver RS-422 (AELT-5000 or equivalent)
Linearity error	± 1/4 pulse
Travel speed	4 m/s
Electromagnetic compatibility	according to 2014/30/EU directive
RoHS	according to 2015/863/EU directive
UL / CSA	certificate n. E212495

[1] as measured at the transducer without cable influences
[2] for further details refer to OUTPUT LEVELS on TECHNICAL BASICS section
[3] measured on transducer housing
[4] condensation allowed

MECHANICAL SPECIFICATIONS

Enclosure rating	IP 67 (IEC 60529)
Shock	50 G, 11 ms (IEC 60068-2-27)
Vibration	20 G, 10 ... 2000 Hz (IEC 60068-2-6)
Housing material	anodized aluminium
Fixing	n. 2 holes ø 3,5 mm
Operating temperature[3,4]	-20° ... +85°C (-4° ... +185°F)
Storage temperature[4]	-25° ... +70°C (-13° ... +158°F)
Working distance from magnetic tape	ETMA 1 / 4 / 5 < 1,5mm with magnetic tape protection < 2mm without cover ETMA 2 / 6 < 0,5mm with magnetic tape protection < 1mm without cover
Weight	150 g (5,29 oz)

CONNECTIONS

Function	Cable P	Cable L / RS
+V DC	red	red
0 V	black	black
A+	green	green
A-	/	brown or grey
B+	yellow	yellow
B-	/	orange
Z+	blue	blue
Z-	/	white
⏚	shield	shield

© Copyright 2020 Eltra S.p.a. Unipersonale. All rights reserved. All informations in this catalog are subject to change without notice.
Eltra takes no responsibility for typographic errors. For the terms of sales please check the website. REV. 191206

Experts on Design-In
Angst+Pfister Sensors and Power

Angst+Pfister
Sensors and Power

We are here for you. Addresses and Contacts.

Headquarter Switzerland:

Angst+Pfister Sensors and Power AG
Thurgauerstrasse 66
CH-8050 Zurich
Phone +41 44 877 35 00
sensorsandpower@angst-pfister.com

Office Germany:

Angst+Pfister Sensors and Power Deutschland GmbH
Edisonstraße 16
D-85716 Unterschleißheim
Phone +49 89 374 288 87 00
sensorsandpower.de@angst-pfister.com

Scan here and get an overview of personal contacts!

sensorsandpower.angst-pfister.com