N35MA Series Datasheet

N35MA Series
36-Bits Multi-Turn & 20-Bits Single Turn Absolute Encoder Module

N35MA-□ □□-□□-□-000-00E

- Single/ Multi-Turn: S : Single-turn M: Multi-turn
- Resolution BITs: 20 : 20-Bits Resolution (ST20bits); 36 : 36-Bits Resolution (ST20bits / MT16bits)
- Serial Protocol: 01:BiSS-C; 03:RS-485 half-duplex
- Shaft Diameter: 5 : 5mm 6 : 6mm
- Complying with RoHS

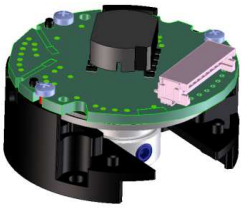

Introduction

N35MA series encoder is a high-resolution optical absolute encoder, which offers 20-bits single turn and 16-bits multi-turn counts, hence a combined 36 bits high resolution for multi-turn encoder. Also, it offers optional 20-bits single turn count only for single turn encoder. The N35MA series encoder is a module encoder consists of a patterned disk, a light source and photosensitive elements to translate the mechanical motion into electrical signal. The N35MA series encoder has a built in communication protocol which supported by a full-duplex or half-duplex line transmissions drive, offering good noise immunity for more robust transmission of data up to 10Mbps in harsh industrial application.

The key advantage of the N35MA series is its multi-turn tracking that employs energy-harvesting technology by harvesting the magnetic energy as the encoder shaft rotates. It is the gearless multi-turn counting that eliminates the gear wear-out or acoustics noise issue that encountered in conventional geared multi-turn encoder. On the other hand, when comparing to battery backed up multi-turn counting, this technology does not require periodic maintenance of the battery backup components and the down time associated with it..

Operating Theory

Structures-wise, the encoder contains two main functional blocks: the single-turn optical engine block and the energy-harvesting multi-turn counter block. The single-turn engine comprises a high-performance optical detector ASIC, which is accompanied by high-precision amplifiers circuitry, coupled with a special multi-track code disk that rotates between the LED emitter and detector IC.

On the multi-turn side, the multi-turn counting is enabled utilizing energy-harvesting technology. When the shaft is rotating, the magnet mounted on the shaft moves in tandem. The energy-harvesting coil module cuts the moving magnet field, and generates energy as a result.

The beauty of the energy-harvesting effect is that the same amount of energy is generated independent of the rotation speed. The generated energy is sufficient to power up the revolution tracking circuitry. Therefore, no miscounts even in the absence of external power supply.

Features

- Multi-turn encoder: 36-bits resolution with 16-bits energy harvesting multi-turn & 20-bits optical single turn
- Single turn encoder: 20-bits resolution with 20-bits optical single turn only
- Built-in communication protocol (options): BiSS C mode & RS-485 half-duplex
- Overall encoder outer diameter Ø35 mm and maximum height of 21 mm
- Supporting 5mm and 6mm diameter of the shaft
- 5K bits of user accessible memory in E2PROM

Benefits

- No battery or capacitor required for position detection during power failure
- Immediate position detection on power up

Applications

- Robotics
- Factory automation
- Linear positioning system
- CNC machine tool
- Medical and lab equipment

Note: Our encoders are not recommended for use in safety critical applications. E.g. ABS braking systems, power steering, life support systems and critical care medical equipment. Please contact sales representative if more clarification is needed.

Experts on Design-In
Angst+Pfister Sensors and Power

Experts on Design-In
Angst+Pfister Sensors and Power

N35MA Series Datasheet

Product Specifications

Electrical Specifications

Parameters	Conditions	Min	Typ	Max	Units
Current Consumption	Without load, T_{amb} = 25˚C	-	115	200	mA
Supply Voltage	-	4.5	5	5.5	V
Electrically Permissible Speed	-	-	-	10,000	RPM

Mechanical Specifications

Parameters	Conditions	Min	Typ	Max	Units
System Accuracy	T_{amb} = 25˚C	-	±500	-	Arc-sec
	With electrical correction(1), T_{amb} = 25˚C	-	±120	-	Arc-sec
Mechanical Permissible Speed	-	-	-	10,000	RPM

Notes (1): Electrical correction require a reference encoder system

Environmental Specifications

Parameters	Conditions	Min	Typ	Max	Units
Storage Temperature	-	-20	-	105	°C
Operating Temperature	-	-20	-	105	°C
Relative Air Humidity (Non-Condensing)	T_{amb} = 60˚C	-	90	-	RH%
Vibration	Per IEC 60068-2-6	-	-	10G; 10~2000Hz	-
Shock	Per IEC 60068-2-27	-	-	6ms; Half Sine; 200G	-
Electrostatic Discharge (Module level)	Per IEC 61000-4-2	-	-	2	kV

Encoder Specifications

Parameter	Remarks
Single turn Resolution	Single Turn 20 bits (1048575 counts)
Multi-turn Resolution	Multi-turn 16 bits (65535 counts)
Counting Direction	Increase with Clockwise (CW) motor shaft rotation, view from encoder top (Figure 1)
Initialization Time	500 ms

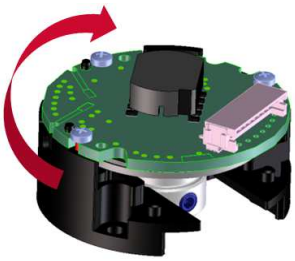

Figure 1

Note:

1. Exposure to absolute maximum rating conditions for extended periods may affect reliability

Experts on Design-In Angst+Pfister Sensors and Power

Interface Diagram

The following are examples of the circuit diagram of full-duplex and half-duplex transceiver.

Full-duplex transceiver (BiSS C mode protocol):

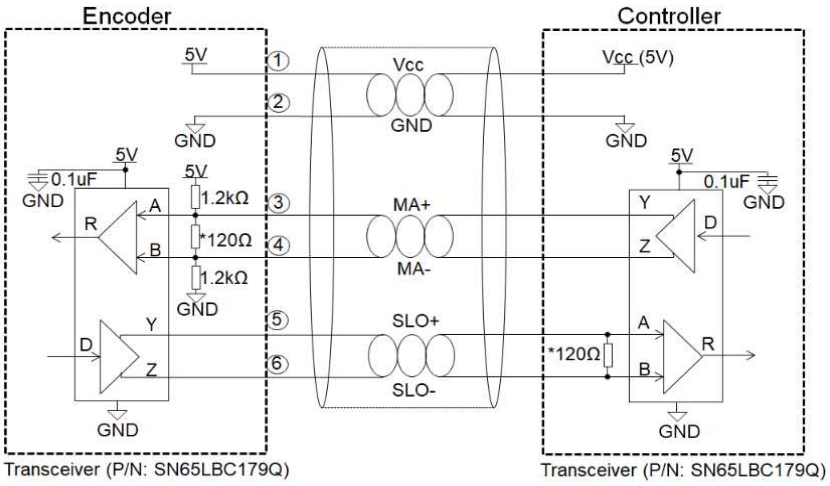

Figure 2: Circuit diagram of full-duplex transceiver

Half-duplex transceiver (RS-485 half-duplex protocol):

The following are examples of the circuit diagram of RS-485 half-duplex transceiver.

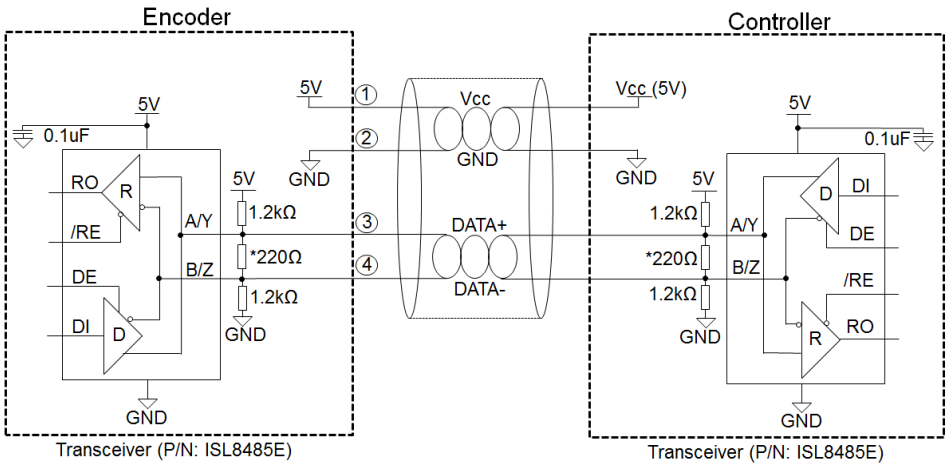

Figure 3: Circuit diagram of full-duplex transceiver

Note:

1) Termination resistor, *120ohm and *220ohm are recommended but may depends on the characteristic impedance of cable used.

Experts on Design-In
Angst+Pfister Sensors and Power

Experts on Design-In
Angst+Pfister Sensors and Power

Connector Output Assignment

Pin	BiSS C mode	RS-485 half-duplex
1	VCC, Positive Supply	VCC, Positive Supply
2	GND, Ground	GND, Ground
3	MA+	DATA+
4	MA-	DATA-
5	SLO+	Phase Calibration Signal 1
6	SLO-	Phase Calibration Signal 2
7	Phase Calibration Signal 1	Phase Calibration Signal 3
8	Phase Calibration Signal 2	Phase Calibration Signal 4
9	Phase Calibration Signal 3	N/A
10	Phase Calibration Signal 4	N/A

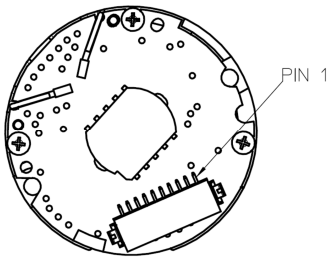

*Recommended mating connector:
Hirose Part No: DF13-10S-1.25C (CL No.536-0006-8)
Hirose (Terminal Pin for Wire 26~30AWG): DF13-2630SCF (CL No.536-0300-5)

Mechanical Drawing

Package Dimensions

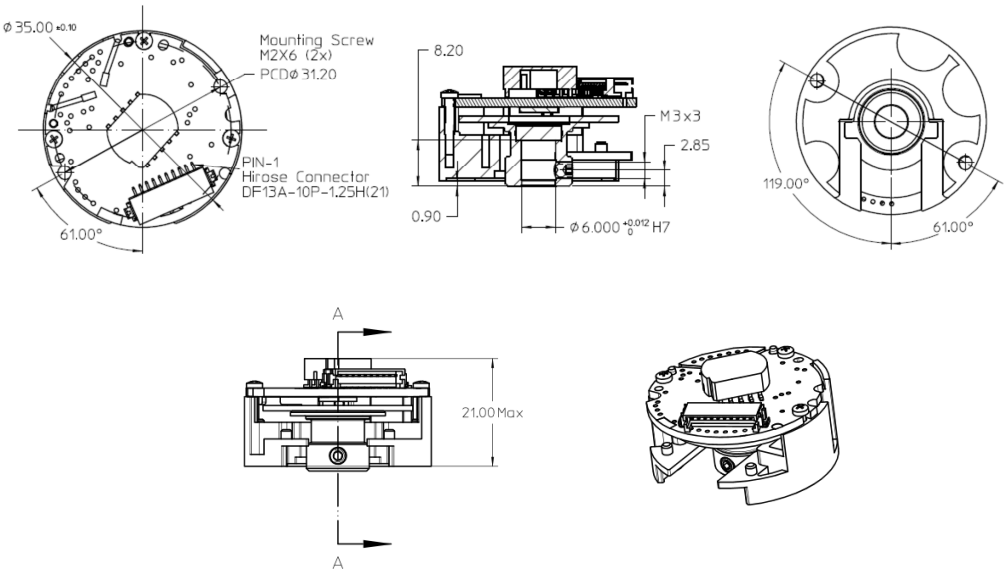

Figure 4: Package dimensions in 3D view

Experts on Design-In
Angst+Pfister Sensors and Power

Experts on Design-In
Angst+Pfister Sensors and Power

N35MA Series Datasheet

Recommended Shaft and Mounting Requirement

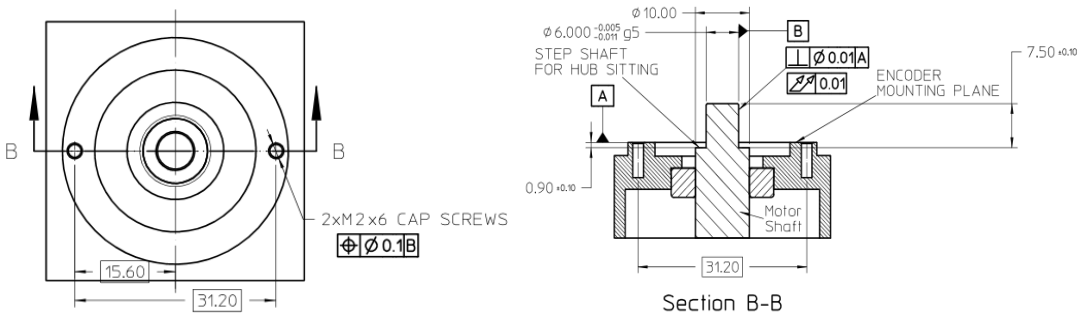

Figure 5: Recommended shaft and mounting requirement:

Note:
1. Dimensions are in millimeters
2. 3rd Angle Projection
3. Unless otherwise specified, all tolerances are within ±0.5 mm

The Terms & Condition

- This module encoder is NON Ingress Protection rated.

Customer will have to ensure:

a). Clean Room (100K) Environment for Encoder Assembly onto Motor
b). Encoder has to be enclosed in the Ingress Protection of IP50 at all time during the operation/application
c). For optimum performance, the design of encoder cover has to fulfill certain EMC protection.
d). To get optimum performance, electrical correction (accuracy calibration), phase calibration and correct installation (alignment) are required.
e). Refer to Application Note for installation of encoder.

Experts on Design-In
Angst+Pfister Sensors and Power

Headquarter Switzerland:
Angst+Pfister Sensors and Power AG

Thurgauerstrasse 66
CH-8050 Zurich
Phone +41 44 877 35 00
sensorsandpower@angst-pfister.com

Office Germany:
Angst+Pfister Sensors and Power
Deutschland GmbH
Edisonstraße 16
D-85716 Unterschleißheim
Phone +49 89 374 288 87 0
sensorsandpower.de@angst-pfister.com

Angst+Pfister
Sensors and Power

We are here for you. Addresses and Contacts.

Sales Germany & Austria

Geometrical sensors
Other products

Kurt Stritzelberger
Phone +49 89 374 288 87 22
kurt.stritzelberger@angst-pfister.com

Pressure sensors
Other products

Gerhard Vetter
Phone +49 89 374 288 87 26
gerhard.vetter@angst-pfister.com

Gas sensors and modules

Peter Felder
Phone +41 44 877 35 05
peter.felder@angst-pfister.com

Sales Switzerland & Liechtenstein

Postcode 3000 – 9999

Basil Frei
Phone +41 44 877 35 18
basil.frei@angst-pfister.com

Postcode 1000 – 2999

Christian Mohrenstecher
Phone +41 76 444 57 93
christian.mohrenstecher@angst-pfister.com

Sales International Key Accounts

Peter Felder
Phone +41 44 877 35 05
peter.felder@angst-pfister.com

Sales Other Countries / Product Management

Pressure Sensors
Load Cells

Philipp Kistler
Phone +41 44 877 35 03
philipp.kistler@angst-pfister.com

Power supplies

Sebastiano Leggio
Phone +41 44 877 35 06
sebastiano.leggio@angst-pfister.com

Drive technology
CH Postcode 5000 – 9999 / DE

Roman Homa
Phone +41 76 444 00 86
roman.homa@angst-pfister.com

Gas sensors
Gas sensor modules

Dr. Thomas Clausen
Phone +49 89 374 288 87 24
thomas.clausen@angst-pfister.com

Linear position sensors
Angle sensors

Eric Letsch
Phone +41 44 877 35 14
eric.letsch@angst-pfister.com

Drive technology
CH Postcode 1000 – 4999 / AT / IT / FR

Christian Mohrenstecher
Phone +41 76 444 57 93
christian.mohrenstecher@angst-pfister.com

Flow / Level / Medical products

Dr. Adriano Pittarelli
Phone +49 89 374 288 87 67
adriano.pittarelli@angst-pfister.com

Accelerometers
Sensor elements

Christoph Kleye
Phone +49 89 374 288 87 61
christoph.kleye@angst-pfister.com

Harald Thomas
Phone +49 89 374 288 87 23
harald.thomas@angst-pfister.com

Experts on Design-In
for sensors and power solutions

Angst+Pfister
Sensors and Power

We are here for you. Addresses and Contacts.

Headquarter Switzerland:

Angst+Pfister Sensors and Power AG
Thurgauerstrasse 66
CH-8050 Zurich
Phone +41 44 877 35 00
sensorsandpower@angst-pfister.com

Office Germany:

Angst+Pfister Sensors and Power Deutschland GmbH
Edisonstraße 16
D-85716 Unterschleißheim
Phone +49 89 374 288 87 00
sensorsandpower.de@angst-pfister.com

Scan here and get an overview of personal contacts!

sensorsandpower.angst-pfister.com